VE-LOCK®

SAE FLANGES

VAISHNAVI HYDRAULICS PVT. LTD.

ISO 9001 :2008 Certified Company

VE-LOCK

VE-LOCK

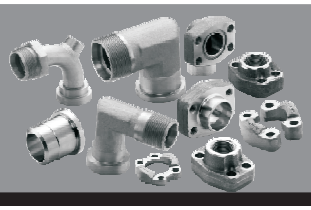

VE-LOCK

CONTENTS

Sr. No.		Page
1.	Company Profile	1-3
2.	Product Range	5-7
3.	Technical Information	8-9
4.	A. S. A. Scheule Pipe Sizes	10
5.	SAE Split Flange Halves1	11-12
6.	SAE Flange Clamp	13
7.	SAE Flange Clam with Tapped Holes - Metric	14
8.	SAE BSP Threaded Flange	15-16
9.	SAE NPT Threaded Flange	17
10.	SAE Socket Weld Flange	18
11.	SAE Butt Welded Flange	19
12.	SAE Weld on Flange	20
13.	SAE Butt Weld to - Metric Pipes ND 40	21-22
14.	SAE - UN - Threaded Flange	23
15.	SAE - BSP Threaded 90° Elbow	24-25
16.	SAE - Socket Weld 90° Elbow for Metric Pipes	26-29
17.	SAE - Pipe Threaded Companion Flange	30
18.	SAE - NPT Threaded Flange Companion	31
19.	SAE - Socket Weld Flange Companion	32
20.	SAE - Butt Weld Companion Flanges	33-37
21.	SAE - Closing Flange	38
22.	SAE - Socket Weld Flange 500 P.S.I.	39
23.	SAE - Socket Weld Flange 500 P.S. al	40
24.	SAE - JIC Thread Flange	41
25.	SAE - Metric Threaded Flange DIN 3901/3902	42
26.	SAE - Locking Sheet	43
27.	SAE - Adaptor Sheet	44
28.	SAE - Adaptor Flange with Test-point	45
29.	SAE - Flange Plug	46
30.	SAE - Flange Head	47
31.	SAE - Socket Weld Coupling Flange	48
32.	SAE - Weld on Coupling	49
33.	Butt Weld Coupling Loose Head Flange	50
34.	Butt Weld Loose Head Flange	51-55
35.	Butt Weld Nipple Adaptor	56
36.	SAE (Male) BSPP Adaptor	57
37.	SAE (Female) Socket Weld Adaptor	58
38.	SAE BSPP Female Adaptors	59
39.	SAE - Metric Threaded Flange DIN 3901/3902	60-61
40.	SAE - 90° Swept Elbow to DIN 3901/3902	62
41.	SAE - 90° Compact Elbow - Metric to DIN 3901/3902	63

VE-LOCK®

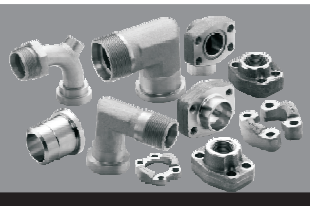

VE-LOCK

CONTENTS

42. SAE - Flange Adaptor 90° - Metric to DIN 3901/3902 64
43. SAE - 90° Compact Elbow - JIC Male 65-66
44. SAE - Weld on Flange Adaptor 90° for metric pipes 67-68
45. SAE - 90° Swept Elbow 69
46. SAE - T Connection 70
47. SAE Adaptor - Brazing 71
48. SAE - Zako Flange 72
49. SAE - Zako Flange Coupling 73
50. SAE - Straight Adaptor Flange 74
51. SAE - 90° L Block 75
52. SAE - 90° L Reduction 76
53. SAE - 90° T Block 77
54. SAE - T - Block Companion 78
55. Flange Connection DIN 3901/3902 79
56. Flange Connection 90° DIN 3901/3902 80-81
57. 90° Compact Elbow - Steel 82
58. 90° Compact Elbow - Aluminium 83
59. 90° Compact Elbows 84
60. 90° Compact Elbows - Aluminium 85
61. Flange Connection - Straight 86
62. Square Flange ND 160 bar 87
63. Square Flange ND 250 bar 88
64. Square Flange ND 315 bar 89
65. Square Flange ND 400 bar 90
66. 90° Weld - on Flange 91
67. T - Connection 92
68. Cetop - Square Flange 93-94
69. Cetop 90° - Butt Weld Flange 95
70. New Replaceable Seal System 96
71. High Pressure Welding Nipple 97
72. High Pressure Flange & Welding Nipple 98
73. High Pressure Blanking Flange 99-102
74. Enclosure

- Trade Mark Certificates
- ISO Certificates
- Inspection & Test Certificates
- Manufacture Test Report Mill Test Certificates
- Raw Material Test Report
- Dimensional Test Report
- Final Inspection Report

VE-LOCK®

ABOUT US

- **We** are into the business of experience & Explore all possible opportunities by providing right solutions with the help of resources & technology for the betterment of people & the organization.

- **"Vaishnavi Hydraulics Pvt. Ltd.**. is well known for its brand called " VE-LOCK " & " VE " in the field of Hydraulic & Industrial Engineering application industries like - Railways | Steel Plant Industries | Power plant | Oil & Gas industries |Aeronautics Equipments | Paper Mill Plants | Cement Mixers |Power packs Equipments.

- **"Since year 2006**, Hydraulic & Industrial Engineering industries has found that the usage of VE-LOCK - tube fittings |tube clamps |flanges | tubes | Valves and Quick couplings are leak proof joints for Hydraulic High pressure Piping Systems .

- **"VE-LOCK"** is Dynamic Manufacturing & Exporter company that offers Hydraulic Fluid Power & Motion application components such as - Tube clamps | Tube Fittings | SAE Flanges | High Pressure Valves | Quick Couplings | Seamless Tubes contributes Trouble Free / Leak Proof / Maintenance Free / Long Shelf life of Machine / Better Performance / Superior in Aesthetic Quality to many Hydraulic & Engineering Application Industries like :- like Shipyards , Railways , SPM (Special Purpose Machines) ,Paper Mills, Construction Equipment ,Mobile Hydraulics, Steel plants & Rolling Mills Manufacturing ,Automobiles & Heavy Mobile Vehicles, Refineries & many more ...

- **Mr. Mehul Padiya ,** is Founder / Developer of " VELOCK " Group widely regarded as a "Team Leader " and one of the Proprietor / Director of companies called " VAISHNAVI ENGINEERING " and " VAISHNAVI HYDRAULICS PVT. LTD " in the year 2006 and Year 2011 respectively. He is Qualified Engineer in the Field of Hydraulic & Engineering Application Industries and having boundless ,deep and insightful knowledge, Skills & Leadership about all Hydraulic components & Entrepreneurship. He is master in Knowledge of hydraulics & Engineering piping application & usage , he is skilful having all sort of Skills like - People Management skills , Presentation skills, negotiation skills, management skills , Leadership skills.

- **"VE-LOCK"** has unlimited " CLAMPS "manufacturing Facility like :- Moulds for Plastic Moulding , forging , Casting , Jigs & Fixtures , Clamps Top and Bottom Plates , C rails , Rail nuts , Weld Bushes , Plastic & Aluminium Clamps Moulding Machines. Velock has huge space for Storage , Assembly of such clamps & having capacity of stock for all sizes start from 6 mm up to 219 mm od clamps.

VE-LOCK®

- **"VE-LOCK"** has state of Manufacturing set up in Mumbai city with various & multiple Horizontal CNC lathe machines , Vertical CNC lathe Machines (Milling Machines) Drill Machine , Surface Grinder , Welding Machines , Wire cut machines , Lathe Machines , Traub Machines and Cutting Band Saw Machines to cope up all Big orders / Rush orders / Urgent orders / special development orders / Non standard items orders given by our all valuable clients throughout the world.

- **"VE-LOCK"** has developed machining Centre for Various Steel & Stainless Steel Products for the Process like Cutting /drilling / punching / boring / threading / grinding / Roll threads /Finishing /Marking . " VELOCK " has developed Approved Subcontractor for Surface Treatment of Steel Products with process of Trivalent Zinc Coated (Chrome VI Free) , Yellow Chromatized , Black Phosphatised , Black Zinc coated , Silver Plating , Nickel Chrome Plated nearby our Manufacturing facility so that it saves time in Production & despatch of goods. " VELOCK " has SPARE Manufacturing facility from outside vendors / sub contractors who can support us during the time of Rush Orders / big Projects orders with reduce in delivery time .

- **"VE-LOCK"** is ISO 9001 :2008 Certified Company with Full Proof (Loop less) Systems & Process with in all Working department such that All the documents & information for clients will reach to them in short span of time. Velock is able to Maintain company structure , work procedures , standards ,Core values at par with the ISO 9001 system Manual & Quality systems Procedures design & certified by ISO 9001:2008 certified company. Also Velock can show you all records start from Sales Enquiry of Buyers till the Despatch of goods in written format as specified in the ISO systems. Velock has 2 Surveillance Audit in One year time by ISO Certification body to check if we have maintain such systems & process throughout a year time & the result is successful with them since last 5 years time .

- **"VE-LOCK"** has excellent team of People working with Various area like Design / Development department , Production Department , Quality Control department , Stores , Accounts , Sales department & will be available throughout 24 hrs. Our Team includes Diploma Mechanical Engineers, Production Engineers , B.E. Mechanical Engineers , IIT Engineers in Production department , MBA graduates in Sales & Marketing Department & C.A. in account department, Our Shop floor workers are well experienced People working with us since year 2006.

- Today **"VE-LOCK"** is working in one team & in one DNA & keep moving towards our BHAG (Mount Everest Goal) - i.e. - TO BUILD 1000 CR. DIVERSIFIED GROUP OF COMPANIES BY THE YEAR 2033.

VE LOCK®

Core Purpose:

To Experience & Explore all Possible Opportunities by Providing right solution with the help of Resources & Technology for the betterment of People & Organizations.

Core Values:

1) Self Belief
2) Passion & Possibility Thinking
3) Growing with the Team
4) Continuous Improvement & Innovation
5) No Entitlement Attitude
6) Customers for Life (Aspirational)

BHAG: To Become a 1000Cr. Diversified Group of company by the year 2033.

VIVID Description:

1) 20YEARS FROM NOW ,VELOCK WILL BE KNOWN AS A WORLD CLASS ORGANISATION WITH ITS HEAD OFFICE AT MUMBAI & 100 BRANCHES ALL OVER INDIA, DUBAI,KUWIAT,KSA.,SINGAPORE,EUROPE & USA.

2) WE WILL HAVE MORE THEN 100,000 ACTIVE BUYERS WORLDWIDE AND THERE WILL BE ATLEAST 2 FOR OUR DEALERS IN EACH STATE /CITY/COUNTRY/WORLDWIDE CONTRIBUTION TO OURS THE BETTERMENT OF PEOPLE & ORGANIZATION.

3) 20 YEARS FROM NOW,WILL WE BE KNOWS AS MARKET LEADERS IN HYDRAULIC INDUSTRY AND OUR UNIQUENESS I PRODUCTS & PRODUCTS & SYSTEMS WILL BE JUST ONE CLICK AWAY FROM THE PEOPLE OF THE WORLD.

4) ALL THE EMPLOYEES IN VELOCKS WILL WORK WITH UTMOST PASSION,BRINGING INN OVATION IDEAS AND WITH AN ABSOLUTE NO ENTITLEMENT ATTITUDE SUCH THAT WE WILL KNOWN FROM AS A HUB FOR MANUFACTURING LEADERS WITHIN THE ORGANIZATION.

5) OUR BUSINESS & BRAND PROMISE WILL BE 100%ADVANCE PAYMENTS &WE WILL OFFER NO CREDIT TO ANY BUYERS WORLDWIDE.

6) OURS COMPANIES WILL BE RECOGNIZED AS EXAMPLES AND ROLE MODELS FOR EFFECTIVES FUNCTIONING OF A BUSINESS & PRACTICE FOLLOWED BY US SHALL BECOME A SOURCE OF GUIDANCE AND DIRECTION FOR THE MOST SOUGH AFTER COMPANIES THE WORLD.

7) STUDENDS FROM ALL OVER THE WORLD WILL WANT TO WORK WITH VELOCK AND IT WILL BECOME THE FIRST CHOICE OF EMPLOYMENTS ACROSS THE GLOBE.

8) HAVING DONE ALL THIS, VELOCK WILL BE THE PRESIDENT OF UNITED STATES (U.S.) & OTHER ESTEEMED HONORS FOR ITS CONTRIBUTION TOWARDS INNOVATION AND TECHNOLOGY EXCELLENCE.

VE-LOCK®

INFRASTRUCTURE

VE-LOCK FACILITY	TYPE OF CONCERNED	PLACE OF ADDRESS
SALES OFFICE	WITH 22 PEOPLE	113, Raj Ratna Industrial Estate, Opp. S. N. D. T. Collage,
	WORKING AS	Next to American Spring, Kanchpada, Malad (W), Mumbai - 400 064.
	VE-LOCK TEAM	Working Area - 500 Sq.ft.
WARE HOUSE-1	TUBE CLAMPS	127, Paras Industrial Estate, Kanchpada, Malad (W),
		Mumbai - 400 064, India
		Working Area - 900 Sq.ft.
WARE HOUSE-2	TUBE FITTINGS	113, Raj Ratna Industrial Estate, Opp. S. N. D. T. Collage,
	VALVES	Next to American Spring, Kanchpada, Malad (W), Mumbai - 400 064.
	FLANGES	Working Area - 500 Sq.ft.
	QRC	
VE-LOCK UNIT	**PRODUCT BEING MANUFACTURED**	**INSTALLED MACHINERIES & CAPACITY**
UNIT NO-1	TUBE CLAMPS	MECHANICAL PRESS ....6 Nos
		Hydraulic Press ....2 Nos
AREA	650 SQ.FT	Drill Machine ....4 Nos
		Tapping Machine....4 Nos
DESTINATION	MUMBAI	Welding Machine....1 Nos
		Dies for Top Plates - Make - VE-LOCK
		Dies for Bottom Plates - Make - VE-LOCK
UNIT NO-2	TUBE CLAMPS	Mechanical Press.... 4 Nos.
		Hydraulic Press ....1 Nos
AREA	1200 SQ.FT	Drill Machine ....3 Nos
		Tapping Machine....3 Nos
DESTINATION	MUMBAI	Welding Machine....1 Nos
		Dies for Top Plates - Make - VE-LOCK
		Dies for Bottom Plates - Make - VE-LOCK
UNIT NO-3	TOOL ROOM	Conventional Lathe Machine - Make - PMT
	FOR CLAMPS	CNC Lathe Machine - Make - Lokesh / ACE - 3 Nos
		Spark Irossion Machine
AREA	1100 SQ.FT	Drill Machine
		Vertical Miling Machine
DESTINATION	MUMBAI	CNC Miling Machine
		Pentograph Machine
		Surface Grinder Machine
UNIT NO-4	CNC MACHINE	CNC Lathe Machine - Make - Lokesh / ACE - 2 Nos
	FOR FITTINGS	Conventional Lathe Machine - 3 Nos
	VALVES	Traub Machine - PMT Make - 5 Nos
AREA	1100 SQ.FT	Drill Machine - 2 Nos
		Vertical Miling Machine
DESTINATION	MUMBAI	CNC Miling Machine
		Cutting Machine
		Bandsaw High Speed Cutting Machine
		Automatic Drill / Tapping Machine
		Surface Drinder Machine
		Auto Marking Machine - Laser Marking Machine
		Bench Grinder Machine

VE-LOCK®

VE-LOCK

VE-LOCK

VE-LOCK®

Manufacturing Standards

Our Flanges are manufactured in accordance with the following standards :

SAE Flanges ..... SAE J 518 C, ISO 6162

Cetop Flanges ..... CETOP RP 63H

4 Bolt Square ..... ISO/DIS 6164

Pressure Ratings

For maximum flange pressure ratings, please refer to the tables below and the specific flange catalogue page.

Please note that the quoted pressure ratings are for a working temperature range of between -20°C to +90 °C.

For use outside of this temperature range please Consult Velock Technical Department :

Standard Pressure : Series 3000 psi

Size	Maximum Working Pressure	
	PSI	BAR
½”	5000	340
¾”	5000	340
1”	5000	340
1¼”	4000	275
1½”	3000	200
2”	3000	200
2½”	2500	175
3”	2000	135
3½”	510	35
4”	510	35

High Pressure : Series 6000 psi

Size	Maximum Working Pressure	
	PSI	BAR
⅜”	6000	420
¾”	6000	420
1”	6000	420
1¼”	6000	420
1½”	6000	420
2”	6000	420
2½”	6000	420
3”	6000	420

Materials

For available flange material please refer to relevant page. If several materials are show, the choice of material used is at the discretion of the manufacturer.

Corrosion Protection

Unless otherwise stated on the product range all flanges are delivered in natural condition and coated with a rust inhibitor.

Flange Kits

All flange kits are supplied with relevant bolts and seals, as indicated on corresponding page.

Used Bolts

SAE flanges	..... metric bolts :	DIN 912-8.8 (ISO 4762-8.8) or DIN 912-10.9 (ISO 4762-10.9)*
	..... UNC bolts :	ASA B 18.3
Gear pump flanges	..... metric bolts :	DIN 912-8.8 (ISO 4762-8.8)
4-bolt square flanges	..... metric bolts :	DIN 931/934-8.8 (ISO4014/4017-8.8) or DIN 931/934-10.9 (ISO 4014/4017-10.9)*
Cetop flanges	..... metric bolts :	DIN 931/934-8.8 (ISO4014/4017-8.8) or DIN 931/934-10.9 (ISO 4014/4017-10.9)*

** The system pressure is determined by the wall thickness and the quality of the tube used.*

VE-LOCK®

Seal Material

The standard o-ring seal material is Buna (90 shore). However Viton (85-90 shore) is available as an option on request. For all SAE Flanges and Cetop flanges the o-ring dimensions are according to the following table -

O-Rings for use with SAE Flanges

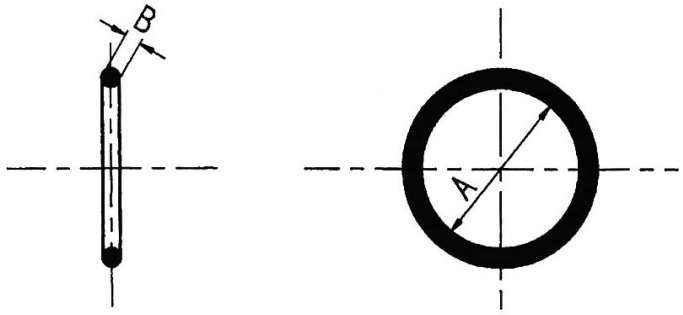

Size	A	B
3/8"	17.12	2.62
½"	18.66	3.53
¾"	25.00	3.53
1"	32.92	3.53
1¼"	37.70	3.53
1½"	47.22	3.53
2"	56.75	3.53
2½"	69.45	3.53
3"	85.32	3.53
3½"	98.02	3.53
4"	110.72	3.53
5"	136.12	3.53

Flange Tube Connections

We suggest that where applicable tubing to the following standards should be utilised

Seamless precision steel tube to DIN2391, material grade C, ST 37-4 or 52-4, Seamless boiler tube to DIN 2441 groups 1 & 2, material grade ST 37-4 or ST 52-4, Tubing according to ASA B36-10.

We suggest the use of tubing to the following dimensions :

Size	Tubes to DIN 2391					Tubes to DIN 2448		Tubes to ASA B 36-10			
	Series					Series		Series			
	100 bar	160 bar	250 bar	315 bar	400 bar	250 bar	400 bar	Schedule	250	Schedule	400
½"	15 x 1 18 x 1	18 x 1.5	16 x 2.0 20 x 2.5	16 x 2.5 20 x 3	16 x 3 20 x 3.5	21.3 x 2.6	21.3 x 3.2	40	21.3 x 2.8	80	21.3 x 3.7
¾"	-	-	25 x 3	25 x 3.5	25 x 4	26.9 x 2.6	26.9 x 4	40	26.7 x 2.9	80	26.7 x 3.9
1"	28 x 2	-	28 x 3 30 x 4	30 x 5	30 x 6	33.7 x 4	33.7 x 6.3	40	33.7 x 4.8	160	33.7 x 6.4
1¼"	35 x 2	-	35 x 4 38 x 5	38 x 6	30 x 7	42.4 x 5	42.4 x 6.3	80	42.4 x 4.8	160	42.4 x 6.4
1½"	42 x 3	-	42 x 5 50 x 6	50 x 8	50 x 9	48.3 x 5	48.3 x 8	80	48.3 x 5.1	160	48.3 x 7.1
2"	-	-	-	65 x 8	65 x 10	60.3 x 6.3	60.3 x 10	160	60.3 x 8.7	200	60.3 x 11.1
	-	-	-	80 x 10	80 x 12.5	76.1 x 8	76.1 x 12.5	160	73 x 9.5	200	73 x 14
3"	-	-	-	-	-	88.9 x 10	88.9 x 16	160	88.9 x 11.1	200	88.9 x 15.2
	-	-	-	-	-	101.6 x 10	101.6 x 16	-	-	-	-
4"	-	-	-	-	-	114.3 x 12.5	114.3 x 20	160	114.3 x 13.5	200	114.3 x 17.1

VE-LOCK®

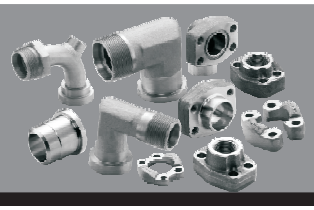

VE-LOCK

A. S. A. SCHEDULE PIPE SIZES

A. S. A. SCHEDULE PIPE SIZES														
Nominal Bore	O.D. mm	Schedule												
		10	20	30	STD & 405	40	60	XS & 80S	80	100	120	140	160	XXS
1/8"	10.3				1.73	1.73		2.41	2.41					
1/4"	13.7				2.24	2.24		3.02	3.02					
3/8"	17.1				2.31	2.31		3.20	3.20					
1/2"	21.3				2.77	2.77		3.73	3.73				4.78	7.47
3/4"	26.7				2.87	2.87		3.91	3.91				5.56	7.82
1"	33.4				3.38	3.38		4.55	4.55				6.35	9.09
1 1/4"	42.2				3.56	3.56		4.85	4.85				6.35	9.07
1 1/2"	48.3				3.68	3.68		5.08	5.08				7.14	10.16
2"	60.3				3.91	3.91		5.54	5.54				8.74	11.07
2 1/2"	73.0				5.16	5.16		7.01	7.01				9.52	14.02
3"	88.9				5.49	5.49		7.62	7.62				11.13	15.24
3 1/2"	101.6				5.74	5.74		8.08	8.08					
4"	114.3				6.02	6.02		8.56	8.56		11.13		14.49	17.12
5"	141.3				6.55	6.55		9.52	9.52		12.70		15.88	19.05
6"	168.3		6.35	7.04	7.11	7.11		10.97	10.97		14.27		18.26	21.95
8"	219.1		6.35	7.80	8.18	8.18	10.31	12.70	12.70	15.09	18.26	20.62	23.01	22.22
10"	273.0		6.35	8.38	9.27	9.27	12.70	12.70	15.09	18.26	21.44	25.40	28.58	25.40
12"	323.9		7.92	9.52	9.52	10.31	14.27	12.70	17.47	21.44	25.40	28.58	33.34	25.40
14"	355.6	6.35	7.92	9.52	9.52	11.13	15.09	12.70	19.05	23.82	27.79	31.75	35.71	
16"	406.4	6.35	7.92	11.13	9.52	12.70	16.64	12.70	21.44	26.19	30.96	36.52	40.49	
18"	457.2	6.35	9.52	12.70	9.52	14.27	19.05	12.70	23.82	29.36	34.92	39.69	45.24	
20"	508.0	6.35	9.52	12.70	9.52	15.09	20.62	12.70	26.19	32.54	38.10	44.45	50.01	
22"	558.8	6.35	9.52	14.27	9.52	15.88	22.22	12.70	28.58	34.92	41.28	47.62	53.98	
24"	609.6	6.35	12.70		9.52	17.48	24.61	12.70	30.96	38.89	46.02	52.39	59.54	
26"	660.4	7.92	12.70	15.88	9.52			12.70						
28"	711.2	7.92	12.70	15.88	9.52			12.70						
30"	762.8	7.92	12.70	15.88	9.52			12.70						
32"	812.8	7.92	12.70	15.88	9.52	17.48		12.70						
34"	863.6	7.92	12.70	15.88	9.52	17.48		12.70						
36"	914.4	7.92	12.70	15.88	9.52	19.05		12.70						

VE-LOCK®

SAE-SPLIT FLANGE HALVES

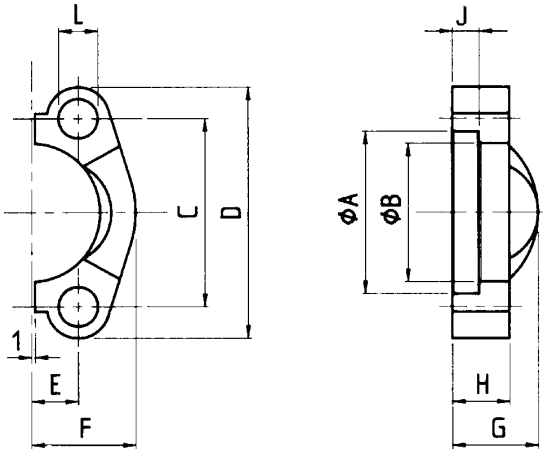

Material : 1. ST 52.3 (FE 510) .... Zinc Plated Yellow Chromate
2. 1.4404/1.4541 316L/321.... Stainless Steel
3. Forged Material

Size	VE-LOCK® ITEM CODE	A	B	C	D	E	F	G	H	J	Ø L	Screws Metric	Screws UNC	Weight kg.
3.000 Series														
1/2"	VEFL 01	30.96	24.26	38.10	54	8.74	22.8	19	13	6.22	8.50	M 8 x 25	5/16" x 1 1/4"	0.07
3/4"	VEFL 02	38.89	32.13	47.63	65	11.13	25.9	22	14	6.22	10.50	M 10 x 30	3/8" x 1 1/4"	0.09
1"	VEFL 03	45.24	38.48	52.37	70	13.08	29.2	24	16	7.49	10.50	M 10 x 30	3/8" x 1 1/4"	0.11
1 1/4"	VEFL 04	51.59	43.69	58.72	79	15.09	36.3	22	16	7.49	12.00	M 10 x 35	7/16" x 1 1/2"	0.15
1 1/4"	VEFL 05	51.59	43.69	58.72	79	15.09	36.3	22	16	7.49	10.50	M 10 x 35	-	0.15
1 1/4"	VEFL 06	51.59	43.69	58.72	79	15.09	36.3	22	16	7.49	12.50	M 12 x 35	-	0.15
1 1/2"	VEFL 07	61.09	50.80	69.85	94	17.86	41.1	25	16	7.49	13.50	M 12 x 35	1/2" x 1 1/2"	0.23
2"	VEFL 08	72.24	62.74	77.77	102	21.44	48.2	26	16	9.02	13.50	M 12 x 35	1/2" x 1 1/2"	0.25
2 1/2"	VEFL 09	84.94	74.93	88.90	114	25.40	54.1	38	19	9.02	13.50	M 12 x 40	1/2" x 1 1/2"	0.37
3"	VEFL 10	102.39	90.93	106.38	135	30.96	65.3	41	22	9.02	16.75	M 16 x 45	5/8" x 2"	0.65
3 1/2"	VEFL 11	115.10	102.36	120.65	152	34.92	69.5	28	22	10.72	17.00	M 16 x 45	5/8" x 2"	0.75
4"	VEFL 12	127.79	115.06	130.18	162	38.88	76.0	35	25	10.72	17.00	M 16 x 50	5/8" x 2"	0.84
5"	VEFL 13	153.19	140.46	152.40	184	46.04	90.0	41	28	10.72	17.00	M 16 x 50	5/8" x 2"	1.25
6.000 Series														
1/2"	VEFL 14	32.54	24.64	40.49	56	9.12	23.6	22	16	7.24	8.50	M 8 x 30	5/16" x 1 1/4"	0.08
3/4"	VEFL 15	42.06	32.51	50.80	71	11.91	30.0	28	19	8.26	10.50	M 10 x 35	3/8" x 1 1/2"	0.18
1"	VEFL 16	48.41	38.86	57.17	81	13.89	34.8	33	24	9.02	12.50	M 12 x 45	-	0.27
1"	VEFL 17	48.41	38.86	57.15	81	13.89	34.8	33	24	9.02	12.00	-	7/16" x 1 3/4"	0.27
1 1/4"	VEFL 18	54.76	44.45	66.68	95	15.88	38.6	38	27	9.78	14.50	M 14 x 50	-	0.40
1 1/4"	VEFL 19	54.76	44.45	66.68	95	15.88	38.6	38	27	9.78	13.50	-	1/2" x 1 3/4"	0.40
1 1/2"	VEFL 20	64.29	51.56	79.38	113	18.26	47.5	43	30	12.07	16.75	M 16 x 55	5/8" x 2"	0.68
2"	VEFL 21	80.16	67.56	96.82	133	22.23	56.9	52	37	12.07	21.00	M 20 x 65	3/4" x 2 1/2"	1.05

VE-LOCK®

SAE-SPLIT FLANGE HALVES-FLAT

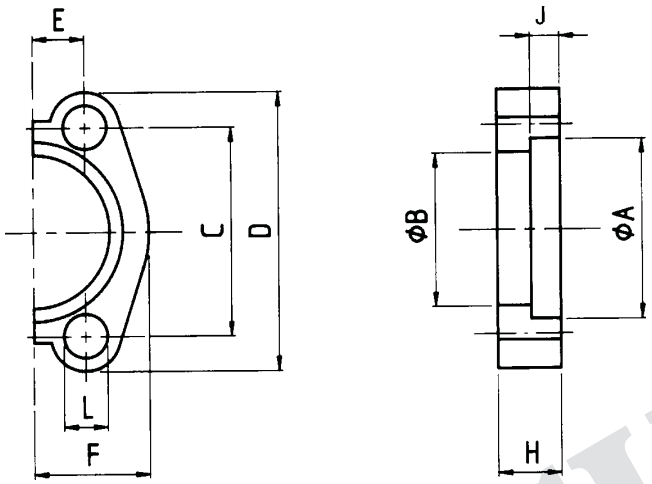

Material : C 60 Zinc Plated Yellow Chromate
Flat - Solid Bar Stock Only

Size	VE-LOCK® ITEM CODE	A	B	C	D	E	F	H	J	ØL	Screws		Weight kg.
											Metric	UNC	
3.000 Series													
1/2"	VEFL 22	30.96	24.26	38.10	54	8.74	22.8	13	6.22	8.50	M 8 x 25	5/16"x 1 1/4"	0.06
3/4"	VEFL 23	38.89	32.13	47.63	65	11.13	25.9	14	6.22	10.50	M 10 x 30	3/8"x 1 1/4"	0.07
1"	VEFL 24	45.24	38.48	52.37	70	13.08	29.2	16	7.49	10.50	M 10 x 30	3/8"x 1 1/4"	0.10
1 1/4"	VEFL 25	51.59	43.69	58.72	79	15.09	36.6	16	7.49	11	M 10 x 35	-	0.15
1 1/2"	VEFL 26	61.09	50.80	69.85	94	17.86	41.1	16	7.49	13	M 12 x 35	1/2"x 1 1/2"	0.18
2"	VEFL 27	72.24	62.74	77.77	102	21.44	48.2	16	9.02	13	M 12 x 35	1/2"x 1 1/2"	0.22
6.000 Series													
1/2"	VEFL 28	32.54	24.64	40.49	56	9.12	23.60	16	7.24	9.00	M 8 x 30	5/16"x 1 1/4"	0.08
3/4"	VEFL 29	42.06	32.51	50.80	71	11.91	30.00	20	8.26	11.00	M 10 x 35	3/8"x 1 1/2"	0.16
1"	VEFL 30	48.41	38.86	57.15	81	13.89	34.80	25	9.02	13.00	M 12 x 45	7/16"x 1 3/4"	0.25
1 1/4"	VEFL 31	54.76	44.45	66.68	95	15.88	38.60	27	9.78	15.00	M 14 x 45	1/2"x 1 3/4"	0.34
1 1/2"	VEFL 32	64.29	51.56	79.38	113	18.26	47.50	30	12.07	17.00	M 16 x 50	5/8"x 2"	0.55
2"	VEFL 33	80.16	67.56	96.82	133	22.23	56.90	37	12.07	21.00	M 20 x 65	3/4"x 2 1/2"	1.02
2 1/2"	VEFL 34	108.90	90.00	123.80	180	29.40	75.08	45	20.50	26.00	M 24 x 75	-	2.05
3"	VEFL 35	132.50	115.00	152.40	215	35.80	99.08	55	25.50	32.00	M 30 x 90	-	4.30

VE-LOCK®

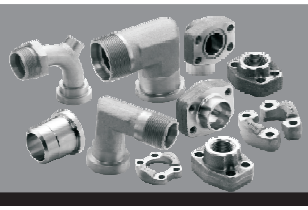

SAE-FLANGE CLAMP

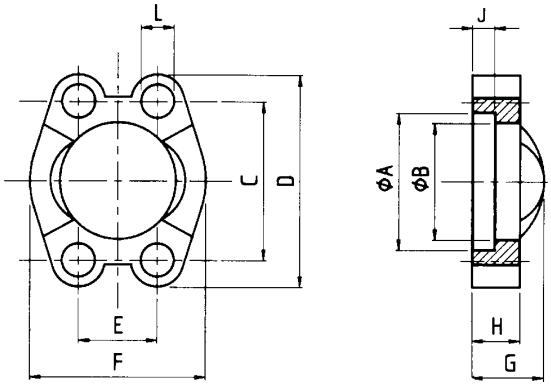

Material : 1. ST 52.3 (FE 510)..... Zinc Plated Yellow Chromate
2. 1.4404/1.4541 316L/320.... Stainless Steel
3. Forged

Size	VE-LOCK® ITEM CODE	A	B	C	D	E	F	G	H	J	ØL	Screws Metric	Screws UNC	Weight kg
3.000 Series														
1/2"	VEFL 36	30.96	24.26	38.10	54	17.48	45.6	19	13	6.22	8.50	M 8 x 25	5/16"x 1 1/4"	0.15
3/4"	VEFL 37	38.89	32.13	47.63	65	22.23	51.8	22	14	6.22	10.50	M 10 x 30	3/8"x 1 1/4"	0.17
1"	VEFL 38	45.24	38.48	52.37	70	26.19	58.4	24	16	7.49	10.50	M 10 x 35	3/8"x 1 1/4"	0.22
1"	VEFL 39	45.24	38.48	52.37	71	26.19	60.0	26	26	7.49	10.50	M 10 x 45	-	0.43
1 1/4"	VEFL 40	51.59	43.69	58.72	79	30.18	72.6	22	16	7.49	12.00	M 10 x 35	7/16"x 1 1/2"	0.30
1 1/4"	VEFL 41	51.59	43.69	58.72	80	30.18	73.0	33	24	7.49	13.00	M 12 x 45	-	0.64
1 1/2"	VEFL 42	61.09	50.80	69.85	94	35.71	82.2	25	16	7.49	13.50	M 12 x 35	1/2"x 1 1/2"	0.45
1 1/2"	VEFL 43	61.09	50.80	69.85	95	35.71	83.0	37	27	7.49	13.50	M 12 x 50	-	0.96
2"	VEFL 44	72.24	62.74	77.77	102	42.88	96.4	26	16	9.02	13.50	M 12 x 35	1/2"x 1 1/2"	0.50
2"	VEFL 45	72.24	62.74	77.77	103	42.88	97.0	43	30	9.02	13.50	M 12 x 50	-	1.38
2 1/2"	VEFL 46	84.94	74.93	88.90	114	50.80	108.2	38	19	9.02	13.50	M 12 x 35	1/2"x 1 1/2"	0.74
2 1/2"	VEFL 47	84.94	74.93	88.90	114	50.80	108.2	49	30	9.02	15.00	M 14 x 50	-	1.75
3"	VEFL 48	102.39	90.93	106.38	135	61.93	130.6	41	22	9.02	16.75	M 16 x 50	5/8"x 2"	1.30
3 1/2"	VEFL 49	115.10	102.36	120.65	152	69.85	139.0	28	22	10.72	17.00	M 16 x 50	5/8"x 2"	1.50
4"	VEFL 50	127.79	115.06	130.18	162	77.77	152.0	35	25	10.72	17.00	M 16 x 50	5/8"x 2"	1.65
5"	VEFL 51	153.19	140.46	152.40	184	92.08	180.0	41	28	10.72	17.00	M 16 x 50	5/8"x 2"	2.50
6.000 Series														
1/2"	VEFL 52	32.54	24.64	40.49	56	18.24	47.20	22	16	7.24	8.50	M 8 x 30	5/16"x 1 1/4"	0.16
3/4"	VEFL 53	42.06	32.51	50.80	71	23.80	60.00	28	19	8.26	10.50	M 10 x 35	3/8"x 1 1/2"	0.35
1"	VEFL 54	48.41	38.86	57.15	81	27.76	69.90	33	24	9.02	12.50	M 12 x 45	-	0.53
1"	VEFL 55	48.41	38.86	57.15	81	27.76	69.90	33	24	9.02	12.00	-	7/16"x 1 3/4"	0.53
1 1/4"	VEFL 56	54.76	44.45	66.68	95	31.75	77.20	38	27	9.78	14.50	M 14 x 50	1/2"x 1 3/4"	0.80
1 1/2"	VEFL 57	64.29	51.56	79.38	113	36.50	95.00	43	30	12.07	16.75	M 16 x 55	5/8"x 2"	1.35
2"	VEFL 58	80.16	67.56	96.82	133	44.45	113.80	52	37	12.07	21.00	M 20 x 65	3/4"x 2 1/2"	2.10
2 1/2"	VEFL 59	108.90	90.00	123.80	180	58.80	150.20	45	45	20.50	26.00	M 24 x 75	-	4.10
3"	VEFL 60	132.50	115.00	152.40	215	71.60	198.16	55	55	25.50	31.00	M 30 x 90	-	8.60

VE-LOCK®

SAE-FLANGE CLAMP WITH TAPPED HOLES-METRIC

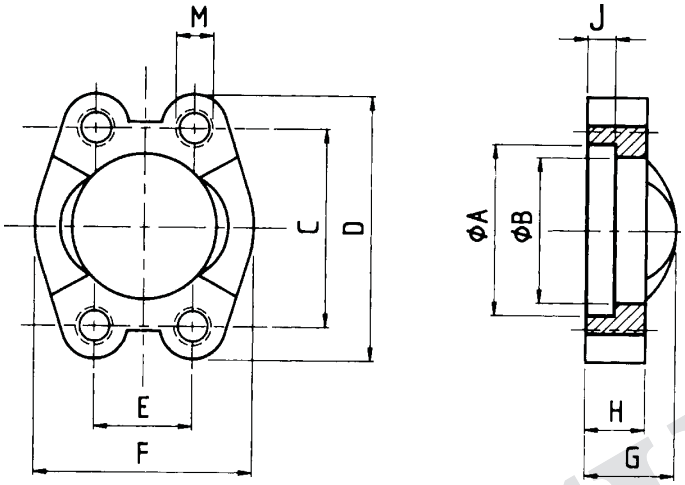

Material : 1. ST 52.3 (FE 510)..... Zinc Plated Yellow Chromate
2. 1.4404, 316..... Stainless Steel
3. Forged

Size	VE-LOCK® ITEM CODE	A	B	C	D	E	F	G	H	J	M	Weight kg
3.000 Series												
1/2"	VEFL 61	30.96	24.26	38.10	54	17.48	45.6	19	13	6.22	M 8	0.15
3/4"	VEFL 62	38.89	32.13	47.63	65	22.23	51.8	22	14	6.22	M 10	0.17
1"	VEFL 63	45.24	38.48	52.37	70	26.19	58.4	24	16	7.49	M 10	0.22
1 1/4"	VEFL 64	51.59	43.69	58.72	79	30.18	72.6	22	16	7.49	M 10	0.30
1 1/2"	VEFL 65	61.09	50.80	69.85	94	35.71	82.2	25	16	7.49	M 12	0.45
2"	VEFL 66	72.24	62.74	77.77	102	42.88	96.4	26	16	9.02	M 12	0.50
2 1/2"	VEFL 67	84.94	74.93	88.90	114	50.80	108.2	38	19	9.02	M 12	0.74
3"	VEFL 68	102.39	90.93	106.38	135	61.93	130.6	41	22	9.02	M 16	1.30
3 1/2"	VEFL 69	115.10	102.36	120.65	152	69.85	139.0	28	22	10.72	M 16	1.50
4"	VEFL 70	127.79	115.06	130.18	162	77.77	152.0	35	25	10.72	M 16	1.65
5"	VEFL 71	153.19	140.46	152.40	184	92.08	180.0	41	28	10.72	M 16	2.50
6.000 Series												
1/2"	VEFL 72	32.54	24.64	40.49	56	18.24	47.20	22	16	7.24	M 8	0.16
3/4"	VEFL 73	42.06	32.51	50.80	71	23.80	60.00	28	19	8.26	M 10	0.35
1"	VEFL 74	48.41	38.86	57.15	81	27.76	69.90	33	24	9.02	M 12	0.53
1 1/4"	VEFL 75	54.76	44.45	66.68	95	31.75	77.20	38	27	9.78	M 14	0.80
1 1/2"	VEFL 76	64.29	51.56	79.38	113	36.50	95.00	43	30	12.07	M 16	1.35
2"	VEFL 77	80.16	67.56	96.82	133	44.45	113.80	52	37	12.07	M 20	2.10
2 1/2"	VEFL 78	108.90	90.00	123.80	180	58.80	190.20	45	45	20.50	M 24	4.10
3"	VEFL 79	132.50	115.00	152.40	215	71.50	198.16	55	55	25.50	M 30	8.60

VE-LOCK®

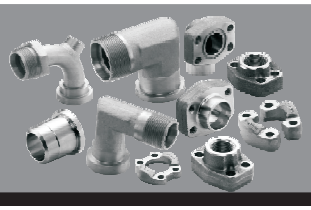

SAE-BSP THREADED FLANGE

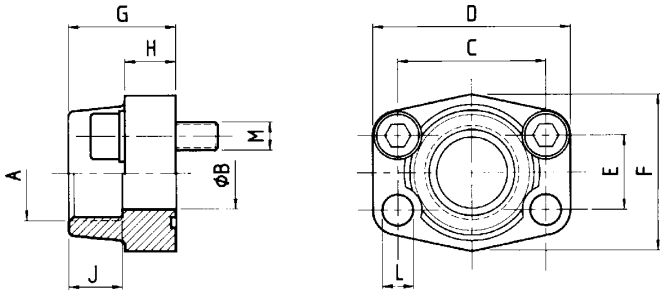

Material: 1 ST 44.3 (FE 430).....Carbon Steel
2. 1.4404 316L.....Stainless Steel

3000 Series														
Size	VE-LOCK® ITEM CODE	A	B	C	D	E	F	G	H	J	ØL	M (Screws)		Weight kg
												Metric	UNC	
1/2"	VEFL 80	R 1/2"	13	38.10	54	17.48	46	36	16	19	9.0	M 8 x 30	5/16"x 1 1/4"	0.25
1/2"	VEFL 81	R 3/8"	13	38.10	54	17.48	46	36	16	19	9.0	M 8 x 30	5/16"x 1 1/4"	0.28
3/4"	VEFL 82	R 3/4"	19	47.63	65	22.23	50	36	18	19	11.0	M 10 x 35	3/8"x 1 1/2"	0.39
3/4"	VEFL 83	R 1/2"	13	47.63	65	22.23	50	36	18	19	11.0	M 10 x 35	3/8"x 1 1/2"	0.42
1"	VEFL 84	R 1"	25	52.37	70	26.19	55	38	18	22	11.0	M 10 x 35	3/8"x 1 1/2"	0.46
1"	VEFL 85	R 3/4"	19	52.37	70	26.19	55	35	21	19	11.0	M 10 x 35	3/8"x 1 1/2"	0.49
1"	VEFL 86	R 1/2"	13	52.37	70	26.16	55	38	18	22	11.0	M 10 x 35	3/8"x 1 1/2"	0.52
1 1/4"	VEFL 87	R 1 1/4"	32	58.72	79	30.18	68	41	21	22	11.5	M 10 x 40	7/16"x 1 1/2"	0.66
1 1/4"	VEFL 88	R 1 1/4"	32	58.72	79	30.18	68	41	21	22	13.0	M 12 x 40	-	0.66
1 1/4"	VEFL 89	R 1"	25	58.72	81	30.18	65	42	25	22	11.5	M 10 x 40	7/16"x 1 3/4"	0.75
1 1/4"	VEFL 90	R 1"	25	58.72	81	30.18	65	42	25	22	13.0	M 12 x 40	-	0.75
1 1/4"	VEFL 91	R 3/4"	19	58.72	79	30.18	68	41	21	22	11.5	M 10 x 40	7/16"x 1 1/2"	0.79
1 1/2"	VEFL 92	R 1 1/2"	38	69.85	93	35.71	78	45	25	24	13.5	M 12 x 45	1/2"x 1 3/4"	1.05
1 1/2"	VEFL 93	R 1 1/4"	32	69.85	95	35.71	78	45	27	24	13.5	M 12 x 45	1/2"x 1 3/4"	1.10
1 1/2"	VEFL 94	R 1"	25	69.85	93	35.71	78	45	25	24	13.5	M 12 x 45	1/2"x 1 3/4"	1.16
1 1/2"	VEFL 95	R 3/4"	19	69.85	93	35.71	78	45	25	24	13.5	M 12 x 45	1/2"x 1 3/4"	1.23
2"	VEFL 96	R 2"	51	77.77	102	42.88	90	45	25	30	13.5	M 12 x 45	1/2"x 1 3/4"	1.19
2"	VEFL 97	R 1 1/2"	38	77.77	102	42.88	90	45	25	26	13.5	M 12 x 45	1/2"x 1 3/4"	1.25
2"	VEFL 98	R 1 1/4"	32	77.77	102	42.88	90	45	25	24	13.5	M 12 x 45	1/2"x 1 3/4"	1.40
2"	VEFL 99	R 1"	25	77.77	102	42.88	90	45	25	26	13.5	M 12 x 45	1/2"x 1 3/4"	1.44
2 1/2"	VEFL 100	R 2 1/2"	63	88.90	114	50.80	105	50	25	30	13.5	M 12 x 45	1/2"x 1 3/4"	1.40
2 1/2"	VEFL 101	R 2"	51	88.90	114	50.80	105	50	25	30	13.5	M 12 x 45	1/2"x 1 3/4"	1.45
3"	VEFL 102	R 3"	73	106.38	134	61.93	124	50	27	34	17.5	M 16 x 50	5/8"x 2"	2.15
3"	VEFL 103	R 2 1/2"	63	106.38	134	61.93	124	50	27	30	17.5	M 16 x 50	5/8"x 2"	2.25
3 1/2"	VEFL 104	R 3 1/2"	89	120.65	152	69.85	136	48	27	34	17.5	M 16 x 50	5/8"x 2"	2.40
3 1/2"	VEFL 105	R 3"	73	120.65	152	69.85	136	48	27	34	17.5	M 16 x 50	5/8"x 2"	2.50
4"	VEFL 106	R 4"	99	130.18	162	77.77	146	48	27	34	17.5	M 16 x 50	5/8"x 2"	2.85
4"	VEFL 107	R 3 1/2"	89	130.18	162	77.77	146	48	27	34	17.5	M 16 x 50	5/8"x 2"	3.00

VE-LOCK®

SAE-BSP THREADED FLANGE

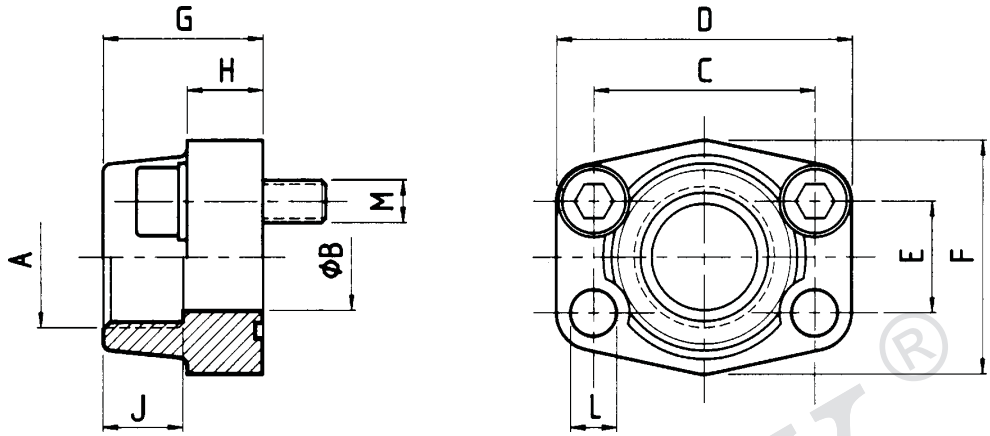

Material: 1 ST 44.3 (FE 430).....Carbon Steel
2. 1.4404, 316L.....Stainless Steel

6.000 Series														
Size	VE-LOCK® ITEM CODE	A	B	C	D	E	F	G	H	J	ØL	M (Screws)		Weight kg
												Metric	UNC	
1/2"	VEFL 108	R 1/2"	13	40.49	54	18.24	46	36	16	19	9	M 8 x 30	5/16"x1 1/4"	0.26
1/2"	VEFL 109	R 3/8"	13	40.49	54	18.24	46	36	16	19	9	M 8 x 30	5/16"x1 1/4"	0.29
3/4"	VEFL 110	R 3/4"	19	50.80	71	23.80	55	35	21	22	11	M 10 x 35	3/8"x1 1/2"	0.50
3/4"	VEFL 111	R 1/2"	13	50.80	71	23.80	55	35	21	22	11	M 10 x 35	3/8"x1 1/2"	0.55
1"	VEFL 112	R 1"	25	57.15	81	27.76	65	42	25	24	13	M 12 x 45	7/16"x1 3/4"	0.76
1"	VEFL 113	R 3/4"	19	57.15	81	27.76	65	42	25	24	13	M 12 x 45	7/16"x1 3/4"	0.80
1 1/4"	VEFL 114	R 1 1/4"	32	66.68	95	31.75	78	45	27	25	15*	M 14 x 45	1/2"x1 3/4"	1.20
1 1/4"	VEFL 115	R 1"	25	66.68	95	31.75	78	45	27	25	15*	M 14 x 45	1/2"x1 3/4"	1.30
1 1/2"	VEFL 116	R 1 1/2"	38	79.38	112	36.50	94	50	30	28	17	M 16 x 50	5/8"x 2"	1.65
1 1/2"	VEFL 117	R 1 1/4"	32	79.38	112	36.50	94	50	30	28	17	M 16 x 50	5/8"x 2"	1.75
2"	VEFL 118	R 2"	51	96.82	134	44.45	114	65	37	30	21	M 20 x 65	3/4"x2 1/2"	2.45
2"	VEFL 119	R 1 1/2"	38	96.82	134	44.45	114	65	37	30	21	M 20 x 65	3/4"x2 1/2"	2.55

VE-LOCK®

SAE-NPT THREADED FLANGE

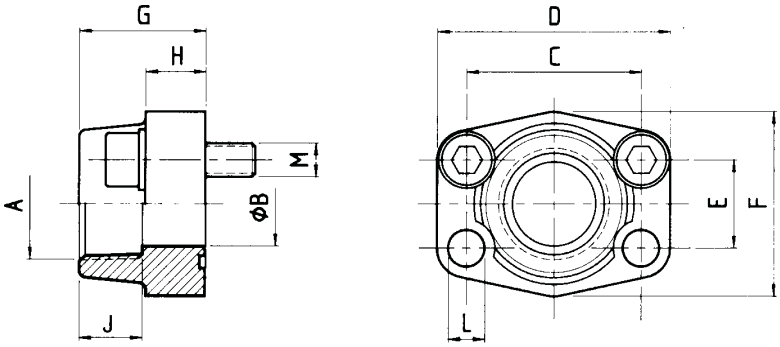

Material: 1 ST 44.3 (FE 430).....Carbon Steel
2. 1.4404, 316L.....Stainless Steel

Size	VE-LOCK® ITEM CODE	A	B	C	D	E	F	G	H	J	ØL	M (Screws) Metric	M (Screws) UNC	Weight kg
3.000 Series														
1/2"	VEFL 120	1/2" NPT	13	38.10	54	17.48	46	36	16	19	9.0	M 8 x 30	5/16"x 1 1/4"	0.25
1/2"	VEFL 121	3/8" NPT	13	38.10	54	17.48	46	36	16	19	9.0	M 8 x 30	5/16"x 1 1/4"	0.28
3/4"	VEFL 122	3/4" NPT	19	47.63	65	22.23	50	36	18	19	11.0	M 10 x 35	3/8"x 1 1/2"	0.39
3/4"	VEFL 123	1/2" NPT	13	47.63	65	22.23	50	36	18	19	11.0	M 10 x 35	3/8"x 1 1/2"	0.42
1"	VEFL 124	1" NPT	25	52.37	70	26.19	55	38	18	22	11.0	M 10 x 35	3/8"x 1 1/2"	0.46
1"	VEFL 125	3/4" NPT	19	52.37	70	26.19	55	35	21	19	11.0	M 10 x 35	3/8"x 1 1/2"	0.49
1 1/4"	VEFL 126	1 1/4" NPT	32	58.72	79	30.18	68	41	21	22	11.5	M 10 x 40	7/16"x 1 1/2"	0.66
1 1/4"	VEFL 127	1" NPT	25	58.72	81	30.18	65	42	25	22	11.5	M 10 x 40	7/16"x 1 1/2"	0.75
1 1/2"	VEFL 128	1 1/2" NPT	38	69.85	93	35.71	78	45	25	24	13.5	M 12 x 45	1/2"x 1 3/4"	1.05
1 1/2"	VEFL 129	1 1/4" NPT	32	69.85	95	35.71	78	45	27	24	13.5	M 12 x 45	1/2"x 1 3/4"	1.10
2"	VEFL 130	2" NPT	51	77.77	102	42.88	90	45	25	30	13.5	M 12 x 45	1/2"x 1 3/4"	1.19
2"	VEFL 131	1 1/2" NPT	38	77.77	102	42.88	90	45	25	26	13.5	M 12 x 45	1/2"x 1 3/4"	1.25
2 1/2"	VEFL 132	2 1/2" NPT	63	88.90	114	50.80	105	50	25	30	13.5	M 12 x 45	1/2"x 1 3/4"	1.40
3"	VEFL 133	3" NPT	73	106.38	134	61.93	124	50	27	34	17.5	M 16 x 50	5/8"x 2"	2.15
3 1/2"	VEFL 134	3 1/2" NPT	89	120.65	152	69.85	136	48	27	34	17.5	M 16 x 50	5/8"x 2"	2.40
4"	VEFL 135	4" NPT	99	130.18	162	77.77	146	48	27	34	17.5	M 16 x 50	5/8"x 2"	2.85
6.000 Series														
1/2"	VEFL 136	1/2" NPT	13	40.49	54	18.24	46	36	16	19	9	M 8 x 30	5/16"x 1 1/4"	0.26
1/2"	VEFL 137	3/8" NPT	13	40.49	54	18.24	46	36	16	19	9	M 8 x 30	5/16"x 1 1/4"	0.29
3/4"	VEFL 138	3/4" NPT	19	50.80	71	23.80	55	35	21	22	11	M 10 x 35	3/8"x 1 1/2"	0.50
3/4"	VEFL 139	1/2" NPT	13	50.80	71	23.80	55	35	21	22	11	M 10 x 35	3/8"x 1 1/2"	0.55
1"	VEFL 140	1" NPT	25	57.15	81	27.76	65	42	25	24	13	M 12 x 45	7/16"x 1 3/4"	0.76
1"	VEFL 141	3/4" NPT	19	57.15	81	27.76	65	42	25	24	13	M 12 x 45	7/16"x 1 3/4"	0.80
1 1/4"	VEFL 142	1 1/4" NPT	32	66.68	95	31.75	78	45	27	25	15*	M 14 x 45	1/2"x 1 3/4"	1.20
1 1/4"	VEFL 143	1" NPT	25	66.68	95	31.75	78	45	27	25	15*	M 14 x 45	1/2"x 1 3/4"	1.30
1 1/2"	VEFL 144	1 1/2" NPT	38	79.38	112	36.50	94	50	30	28	17	M 16 x 50	5/8"x 2"	1.65
1 1/2"	VEFL 145	1 1/4" NPT	32	79.38	112	36.50	94	50	30	28	17	M 16 x 50	5/8"x 2"	1.75
2"	VEFL 146	2" NPT	51	96.82	134	44.45	114	65	37	30	21	M 20 x 65	3/4"x 2 1/2"	2.45
2"	VEFL 147	1 1/2" NPT	38	96.82	134	44.45	114	65	37	30	21	M 20 x 65	3/4"x 2 1/2"	2.55

VE-LOCK®

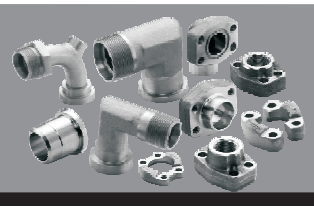

SAE-SOCKET WELD FLANGE

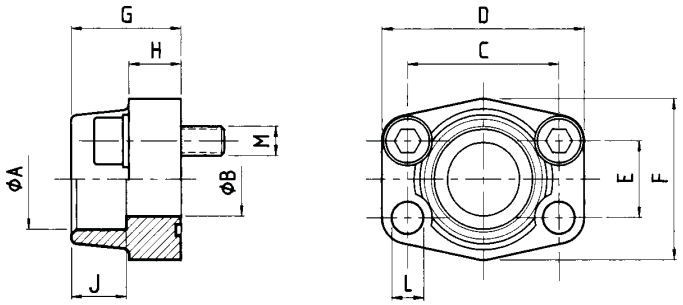

Material: 1 ST 44.3 (FE 430).....Carbon Steel
2. 1.4404 316L.....Stainless

3.000 Series														
Size	VE-LOCK® ITEM CODE	A	B	C	D	E	F	G	H	J	L	M (Screws)		Weight kg
												Metric	UNC	
1/2"	VEFL 148	21.6	13	38.10	54	17.48	46	36	16	19	9.0	M 8 x 30	5/16" x 1 1/4"	0.25
1/2"	VEFL 149	17.5	13	38.10	54	17.48	46	36	16	19	9.0	M 8 x 30	5/16" x 1 1/4"	0.28
1/2"	VEFL 150	20.3	13	38.10	54	17.48	46	36	16	19	9.0	M 8 x 30	5/16" x 1 1/4"	0.25
3/4"	VEFL 151	27.2	19	47.63	65	22.23	50	36	18	19	11.0	M 10 x 35	3/8" x 1 1/2"	0.39
3/4"	VEFL 152	25.3	19	47.63	65	22.23	50	36	18	19	11.0	M 10 x 35	3/8" x 1 1/2"	0.39
1"	VEFL 153	34.0	25	52.37	70	26.19	55	38	18	19	11.0	M 10 x 35	3/8" x 1 1/2"	0.46
1"	VEFL 154	30.3	25	52.37	70	26.19	55	38	18	19	11.0	M 10 x 35	3/8" x 1 1/2"	0.46
1 1/4"	VEFL 155	42.8	32	58.72	79	30.18	68	41	21	22	11.5	M 10 x 40	7/16" x 1 1/2"	0.66
1 1/4"	VEFL 156	38.3	32	58.72	79	30.18	68	41	21	22	11.5	M 10 x 40	7/16" x 1 1/2"	0.66
1 1/2"	VEFL 157	48.6	38	69.85	93	35.71	78	45	25	24	13.5	M 12 x 45	1/2" x 1 3/4"	1.05
1 1/2"	VEFL 158	50.5	38	69.85	93	35.71	78	45	25	24	13.5	M 12 x 45	1/2" x 1 3/4"	1.05
2"	VEFL 159	61.0	51	77.77	102	42.88	90	45	25	26	13.5	M 12 x 45	1/2" x 1 3/4"	1.19
2 1/2"	VEFL 160	76.6	63	88.90	114	50.80	105	50	25	30	13.5	M 12 x 45	1/2" x 1 3/4"	1.40
3"	VEFL 161	90.5	73	106.38	134	61.93	124	50	27	34	17.5	M 16 x 50	5/8" x 2"	2.15
3 1/2"	VEFL 162	103.0	89	120.65	152	69.85	136	48	27	34	17.5	M 16 x 50	5/8" x 2"	2.40
3"	VEFL 163	115.5	99	130.18	162	77.77	146	48	27	34	17.5	M 16 x 50	5/8" x 2"	2.85
6.000 Series														
1/2"	VEFL 164	21.6	13	40.49	54	18.24	46	36	16	19	9.0	M 8 x 30	5/16" x 1 1/4"	0.26
1/2"	VEFL 165	17.5	13	40.49	54	18.24	46	36	16	19	9.0	M 8 x 30	5/16" x 1 1/4"	0.29
1/2"	VEFL 166	20.3	13	40.49	54	18.24	46	36	16	19	9.0	M 8 x 30	5/16" x 1 1/4"	0.26
3/4"	VEFL 167	27.2	19	50.80	71	23.80	55	35	21	22	11.0	M 10 x 35	3/8" x 1 1/2"	0.50
3/4"	VEFL 168	25.3	19	50.80	71	23.80	55	35	21	22	11.0	M 10 x 35	3/8" x 1 1/2"	0.50
1"	VEFL 169	34.0	25	57.15	81	27.76	65	42	25	22	13.0	M 12 x 45	7/16" x 1 3/4"	0.76
1"	VEFL 170	30.3	25	57.15	81	27.76	65	42	25	22	13.0	M 12 x 45	7/16" x 1 3/4"	0.76
1 1/4"	VEFL 171	42.8	32	66.68	95	31.75	78	45	27	25	15.0*	M 14 x 45	1/2" x 1 3/4"	1.20
1 1/4"	VEFL 172	38.3	32	66.68	95	31.75	78	45	27	25	15.0*	M 14 x 45	1/2" x 1 3/4"	1.20
1 1/2"	VEFL 173	48.6	38	79.38	112	36.50	94	50	30	28	17.5	M 16 x 50	5/8" x 2"	1.65
1 1/2"	VEFL 174	50.5	38	79.38	112	36.50	94	50	30	28	17.5	M 16 x 50	5/8" x 2"	1.65
2"	VEFL 175	61.0	51	96.82	134	44.45	114	65	37	24	21.0	M 20 x 65	3/4" x 2 1/2"	2.45
2 1/2"	VEFL 176	76.6	63	123.80	180	58.70	152	80	45	30	26.0	M 24 x 75	-	8.30

VE-LOCK ®

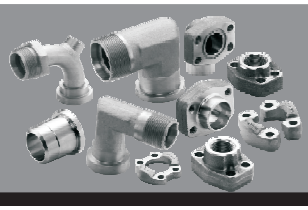

SAE-BUTT WELDED FLANGE

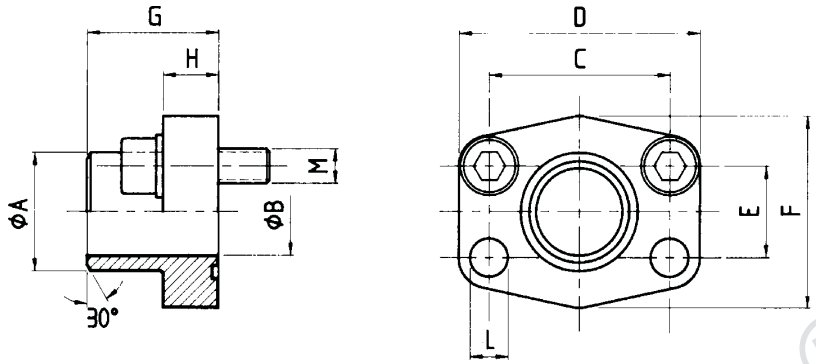

Material: 1 ST 44.3 (FE 430).....Carbon Steel
2. 1.4404 316L..... Stainless

Size	VE-LOCK® ITEM CODE	A	B	C	D	E	F	G	H	ØL	M (Screws) Metric	M (Screws) UNC	Weight kg
3.000 Series													
1/2"	VEFL 177	21.6	13.0	38.10	54	17.48	46	36	16	9.0	M 8 x 30	5/16" x 1 1/4"	0.28
1/2"	VEFL 178	17.5	13.0	38.10	54	17.48	46	36	16	9.0	M 8 x 30	5/16" x 1 1/4"	0.25
3/4"	VEFL 179	28.0	19.0	47.63	65	22.23	50	36	18	11.0	M 10 x 35	3/8" x 1 1/2"	0.39
1"	VEFL 180	34.0	25.0	52.37	70	26.19	55	38	18	11.0	M 10 x 35	3/8" x 1 1/2"	0.46
1 1/4"	VEFL 181	42.8	32.0	58.72	79	30.18	68	41	21	11.5	M 10 x 40	7/16" x 1 1/2"	0.66
1 1/2"	VEFL 182	48.6	38.0	69.85	93	35.71	78	44	25	13.5	M 12 x 45	1/2" x 1 3/4"	1.05
2"	VEFL 183	61.0	51.0	77.77	102	42.88	90	45	25	13.5	M 12 x 45	1/2" x 1 3/4"	1.19
2 1/2"	VEFL 184	77.0	63.0	88.90	114	50.80	105	50	25	13.5	M 12 x 45	1/2" x 1 3/4"	1.40
3"	VEFL 185	92.0	73.0	106.38	134	61.93	124	50	27	17.5	M 16 x 50	5/8" x 2"	2.15
3 1/2"	VEFL 186	103.0	89.0	120.65	152	69.85	136	48	27	17.5	M 16 x 50	5/8" x 2"	2.40
4"	VEFL 187	115.5	99.0	130.18	162	77.77	146	48	27	17.5	M 16 x 50	5/8" x 2"	2.85
5"	VEFL 188	140.2	120.0	152.40	184	92.08	180	50	28	17.5	M 16 x 55	5/8" x 2"	5.20
6.000 Series													
1/2"	VEFL 189	21.5	13.0	40.49	54	18.24	46	36	16	9.0	M 8 x 30	5/16" x 1 1/4"	0.29
1/2"	VEFL 190	17.5	13.0	40.49	54	18.24	46	36	16	9.0	M 8 x 30	5/16" x 1 1/4"	0.26
3/4"	VEFL 191	28.0	19.0	50.80	71	23.80	55	35	21	11.0	M 10 x 35	3/8" x 1 1/2"	0.50
1"	VEFL 192	34.0	25.0	57.15	79	27.76	68	41	21	13.0	M 12 x 45	7/16" x 1 3/4"	0.76
1 1/4"	VEFL 193	42.8	32.0	66.68	93	31.75	78	44	25	15.0*	M 14 x 45	1/2" x 1 3/4"	1.20
1 1/4"	VEFL 194	42.8	29.0	66.68	93	31.75	78	44	25	15.0*	M 14 x 45	1/2" x 1 3/4"	1.35
1 1/2"	VEFL 195	48.6	38.0	79.38	112	36.50	94	55	30	17.0	M 16 x 50	5/8" x 2"	1.65
1 1/2"	VEFL 196	48.6	34.0	79.38	112	36.50	94	55	30	17.0	M 16 x 50	5/8" x 2"	1.80
2"	VEFL 197	61.0	51.0	96.82	134	44.45	114	65	37	21.0	M 20 x 65	3/4" x 2 1/2"	2.45
2"	VEFL 198	61.0	43.0	96.82	134	44.45	114	65	37	21.0	M 20 x 65	3/4" x 2 1/2"	2.70
2 1/2"	VEFL 199	76.1	51.0	123.80	180	58.70	152	80	45	26.0	M 24 x 75	-	6.40
2 1/2"	VEFL 200	90.0	60.5	123.80	180	58.70	152	80	45	26.0	M 24 x 75	-	8.30

VE-LOCK®

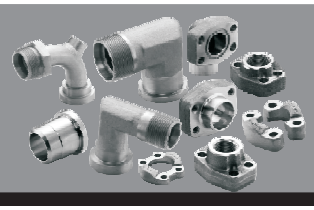

SAE-WELD ON FLANGE-METRIC PIPES

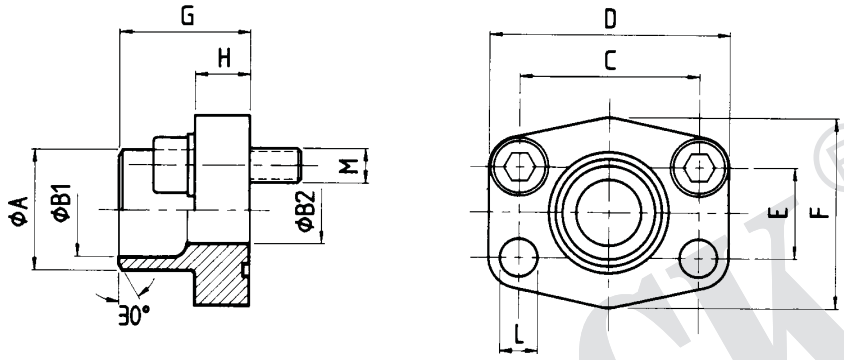

Material: 1 ST 44.3 (FE 430).....Carbon Steel
2. 1.4404 316L.....Stainless Steel

3.000 Series															
Size	VE-LOCK® ITEM CODE	Tube	A	B_1	B_2	C	D	E	F	G	H	ØL	M (Screws)		Weight kg
													Metric	UNC	
$^1/_2$"	VEFL 201	20 x 3	20	14.0	14	38.10	54	17.48	46	35.0	16.0	9.0	M 8 x 30	$^5/_{16}$" x 1$^1/_4$"	0.28
$^1/_2$"	VEFL 202	22 x 3	22	16.0	13	38.10	54	17.48	46	35.0	16.0	9.0	M 8 x 30	$^5/_{16}$" x 1$^1/_4$"	0.28
$^3/_4$"	VEFL 203	25 x 3	25	19.0	19	47.63	65	22.23	50	36.0	18.0	11.0	M 10 x 35	$^3/_8$" x 1$^1/_2$"	0.39
$^3/_4$"	VEFL 204	28 x 3	28	21.5	19	47.63	65	22.23	50	36.0	18.0	11.0	M 10 x 35	$^3/_8$" x 1$^1/_2$"	0.39
1"	VEFL 205	30 x 4	30	22.0	22	52.37	70	26.19	55	38.0	18.0	11.0	M 10 x 35	$^3/_8$" x 1$^1/_2$"	0.46
1"	VEFL 206	35 x 3	35	27.0	25	52.37	70	26.19	55	38.0	18.0	11.0	M 10 x 35	$^3/_8$" x 1$^1/_2$"	0.47
1$^1/_4$"	VEFL 207	38 x 4	38	30.0	30	58.72	79	30.18	68	41.0	21.0	11.5	M 10 x 40	$^7/_{16}$" x 1$^1/_2$"	0.66
1$^1/_4$"	VEFL 208	42 x 3	43	36.0	31	58.72	79	30.18	68	41.0	21.0	11.5	M 10 x 40	$^7/_{16}$" x 1$^1/_2$"	0.66
1$^1/_2$"	VEFL 209	38 x 4	38	30.0	30	69.85	93	35.71	78	44.5	24.5	13.5	M 12 x 45	$^1/_2$" x 1$^3/_4$"	1.05
1$^1/_2$"	VEFL 210	42 x 3	42	36.0	36	69.85	93	35.71	78	44.5	24.5	13.5	M 12 x 45	$^1/_2$" x 1$^3/_4$"	1.05
1$^1/_2$"	VEFL 211	48.3 x 4.5	49	38.0	38	69.85	93	35.71	78	44.5	24.5	13.5	M 12 x 45	$^1/_2$" x 1$^3/_4$"	1.05
2"	VEFL 212	60.3 x 5.6	61	49.0	49	77.77	102	42.88	90	45.0	25.0	13.5	M 12 x 45	$^1/_2$" x 1$^3/_4$"	1.20
2$^1/_2$"	VEFL 213	76.1 x 7.1	77	62	62	88.90	114	50.80	105	50.0	25.0	13.5	M 12 x 45	$^1/_2$" x 1$^3/_4$"	1.40
3"	VEFL 214	76.1 x 7.1	77	62	62	106.38	134	61.93	124	51.0	26.0	17.5	M 16 x 50	$^5/_8$" x 2"	2.15

VE-LOCK®

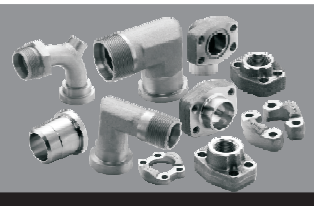

VE-LOCK

SAE BUTT WELD TO - METRIC PIPES ND 40

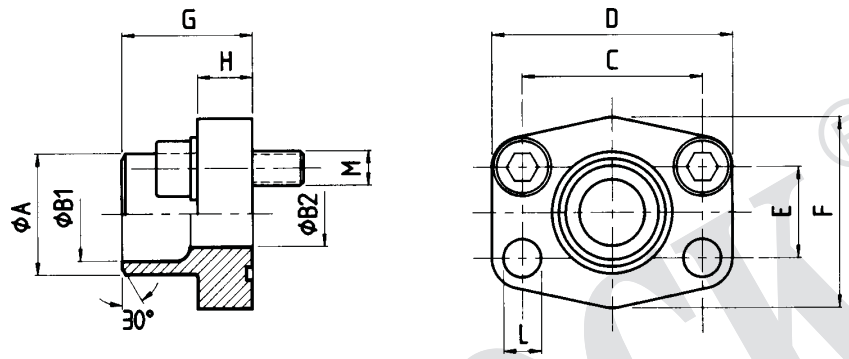

Material: 1 ST 44.3 (FE 430).....Carbon Steel
2. 1.4404 316L..... Stainless

3.000 Series															
Size	VE-LOCK® ITEM CODE	Tube	A	B_1	B_2	C	D	E	F	G	H	ØL	M (Screws)		Weight kg
													Metric	UNC	
$^1/_2$"	VEFL 214	20 x 3	20	14	14	40.49	54	18.24	46	34	16	9	M 8 x 30	$^5/_{16}$" x 1$^1/_4$"	0.29
$^3/_4$"	VEFL 215	20 x 3	20	14	14	50.80	71	23.80	55	35	21	11	M 10 x 35	$^3/_8$" x 1$^1/_2$"	0.50
$^3/_4$"	VEFL 216	25 x 4	25	17	17	50.80	71	23.80	55	35	21	11	M 10 x 35	$^3/_8$" x 1$^1/_2$"	0.53
1"	VEFL 217	25 x 4	25	17	17	57.15	81	27.76	65	42	25	13	M 12 x 45	$^7/_{16}$" x 1$^1/_2$"	0.76
1"	VEFL 218	30 x 4	30	22	22	57.15	81	27.76	65	42	25	13	M 12 x 45	$^7/_{16}$" x 1$^1/_2$"	0.80
1$^1/_4$"	VEFL 219	30 x 4	30	22	22	66.68	95	31.75	78	44	25	15 *	M 14 x 45	$^1/_2$" x 1$^3/_4$"	1.20
1$^1/_4$"	VEFL 220	38 x 6	38	26	26	66.68	95	31.75	78	44	25	15 *	M 14 x 45	$^1/_2$" x 1$^3/_4$"	1.29
1$^1/_2$"	VEFL 221	38 x 6	38	26	26	79.38	112	36.50	94	56	28	17	M 16 x 50	$^5/_8$" x 2"	1.52
1$^1/_2$"	VEFL 222	48.3 x 8	49	32	32	79.38	112	36.50	94	56	28	17	M 16 x 50	$^5/_8$" x 2"	1.57
1$^1/_2$"	VEFL 223	60.3 x 10	61	40	40	79.38	112	36.50	94	56	28	17	M 16 x 50	$^5/_8$" x 2"	1.65
2"	VEFL 224	60.3 x 10	61	40	40	96.82	134	44.45	114	65	33	21	M 20 x 60	$^3/_4$" x 2$^1/_2$"	2.45
2"	VEFL 225	76.1 x 12.5	76	48	48	96.82	134	44.45	114	80	33	21	M 20 x 60	$^3/_4$" x 2$^1/_2$"	2.96

VE-LOCK®

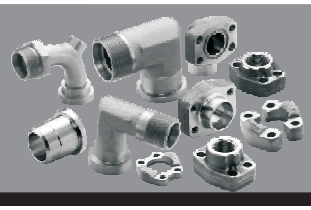

SAE BUTT WELD TO - METRIC PIPES ND 40

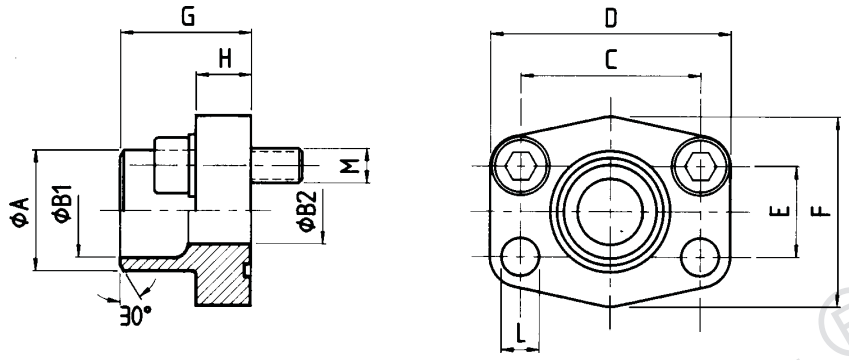

Material: 1 ST 44.3 (FE 430).....Carbon Steel
2. 1.4404 316L.....Stainless Steel

3.000 Series															
Size	VE-LOCK® ITEM CODE	Tube	A	B_1	B_2	C	D	E	F	G	H	ØL	M (Screws)		Weight kg
													Metric	UNC	
1/2"	VEFL 226	21.3 x 2.6	22.0	16.0	13	38.10	54	17.48	46	35.0	16.0	9.0	M 8 x 30	5/16" x 1 1/4"	0.28
3/4"	VEFL 227	26.9 x 2.6	28.0	21.5	19	47.63	65	22.23	50	36.0	18.0	11.0	M 10 x 35	3/8" x 1 1/2"	0.39
1"	VEFL 228	33.7 x 3.2	35.0	27.0	25	52.37	70	26.19	55	38.0	18.0	11.0	M 10 x 35	3/8" x 1 1/2"	0.46
1 1/4"	VEFL 229	42.4 x 3.2	43.0	36.0	31	58.72	79	30.18	68	41.0	21.0	11.5	M 10 x 40	7/16" x 1 1/2"	0.66
1 1/2"	VEFL 230	48.3 x 3.2	49.0	42.0	38	69.85	93	35.71	78	44.5	24.5	13.5	M 12 x 45	1/2" x 1 3/4"	1.05
2"	VEFL 231	48.3 x 3.2	49.0	42.0	42	77.77	102	42.88	90	45.0	25.0	13.5	M 12 x 45	1/2" x 1 3/4"	1.12
2"	VEFL 232	60.3 x 3.6	61.0	53.0	49	77.77	102	42.88	90	45.0	25.0	13.5	M 12 x 45	1/2" x 1 3/4"	1.19
2 1/2"	VEFL 233	60.3 x 3.6	61.0	53.0	53	88.90	114	50.80	105	50.0	25.0	13.5	M 12 x 45	1/2" x 1 3/4"	1.31
2 1/2"	VEFL 234	76.1 x 3.6	77.0	70.0	62	88.90	114	50.80	105	50.0	25.0	13.5	M 12 x 45	1/2" x 1 3/4"	1.40
3"	VEFL 235	88.9 x 3.6	90.0	82.0	74	106.38	134	61.93	124	51.0	26.0	17.5	M 16 x 50	5/8" x 2"	2.15
3 1/2"	VEFL 236	88.9 x 3.6	90.0	82.0	82	120.65	152	69.85	136	48.0	26.0	17.5	M 16 x 50	5/8" x 2"	2.40
3 1/2"	VEFL 237	76.1 x 3.6	77.0	70.0	70	120.65	152	69.85	136	48.0	26.0	17.5	M 16 x 50	5/8" x 2"	2.38
4"	VEFL 238	88.9 x 3.6	90.0	82.0	82	130.18	162	77.77	146	48.0	26.0	17.5	M 16 x 50	5/8" x 2"	2.75
4"	VEFL 239	114.0 x 3.6	115.0	107.0	102	130.18	162	77.77	146	48.0	26.0	17.5	M 16 x 50	5/8" x 2"	2.85
5"	VEFL 240	139.7 x 4.0	141.0	-	131	152.40	190	92.10	170	28.0	28.0	17.5	M 16 x 50	5/8" x 2"	2.80
5"	VEFL 241	139.7 x 4.0	140.2	131	120	152.40	184	92.08	180	50.0	28.0	17.5	M 16 x 55	-	5.00

VE-LOCK®

SAE-UN-THREADED FLANGE

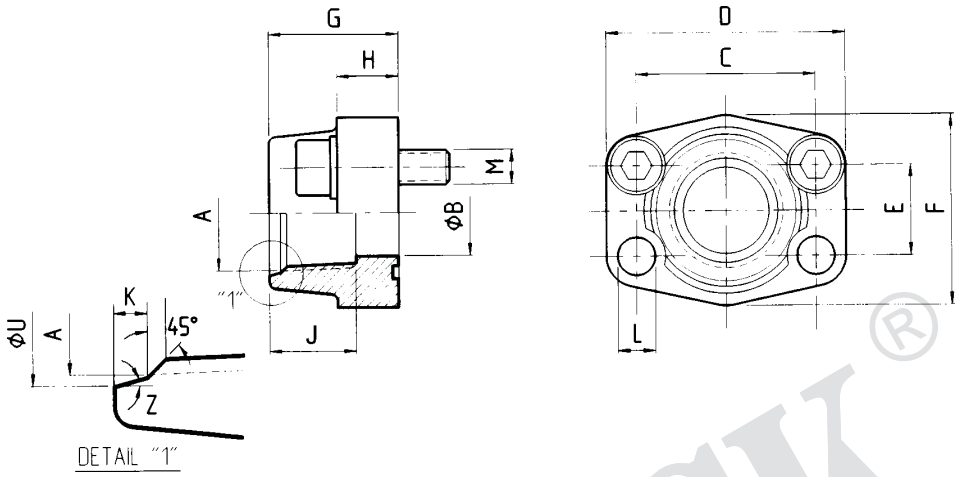

Material: 1 ST 44.3 (FE 430).....Carbon Steel
2. 1.4404, 316L.....Stainless Steel

Size	VE-LOCK® ITEM CODE	A	B	C	D	E	F	G	H	J	ØL	U	E	Z	M (Screws)		Weight kg
															Metric	UNC	
3.000 Series																	
1/2"	VEFL 242	3/4" 16 UNF	13	38.10	54	17.48	46	36	16	17	9.0	20.6	2.5	15°	M 8 x 30	5/16" x 1 1/4"	0.25
3/4"	VEFL 243	1 1/16" 12 UN	19	47.63	65	22.23	50	36	18	23	11.0	29.2	3.3	15°	M 10 x 35	3/8" x 1 1/2"	0.39
1"	VEFL 244	1 5/16" 12 UN	25	52.37	70	26.19	55	38	18	23	11.0	35.5	3.3	15°	M 10 x 35	3/8" x 1 1/2"	0.46
1 1/4"	VEFL 245	1 5/8" 12 UN	32	58.72	79	30.18	68	41	21	23	11.5	43.5	3.3	15°	M 10 x 40	7/16" x 1 1/2"	0.66
1 1/2"	VEFL 246	1 7/8" 12 UN	38	69.85	93	35.71	78	45	25	23	13.5	49.8	3.3	15°	M 12 x 45	1/2" x 1 3/4"	1.05
6.000 Series																	
1/2"	VEFL 247	3/4" 16 UNF	13	40.49	54	18.24	46	36	16	17	9	20.6	2.5	15°	M 8 x 30	5/16" x 1 1/4"	0.26
3/4"	VEFL 248	1 1/16" 12 UN	19	50.80	71	23.80	55	35	21	23	11	29.3	3.3	15°	M 10 x 35	3/8" x 1 1/2"	0.50
1"	VEFL 249	1 5/16" 12 UN	25	57.15	81	27.76	65	42	25	23	13	35.5	3.3	15°	M 12 x 45	7/16" x 1 3/4"	0.76
1 1/4"	VEFL 250	1 5/8" 12 UN	32	66.68	95	31.75	78	45	27	23	15*	43.5	3.3	15°	M 14 x 45	1/2" x 1 3/4"	1.20
1 1/2"	VEFL 251	1 7/8" 12 UN	38	79.38	112	36.50	94	50	30	23	17	49.8	3.3	15°	M 16 x 50	5/8" x 2"	1.65

VE-LOCK®

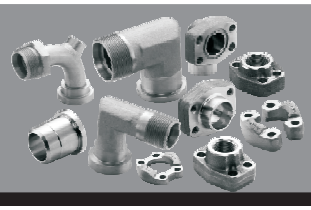

VE-LOCK

SAE-BSP THREADED 90^{0}ELBOW

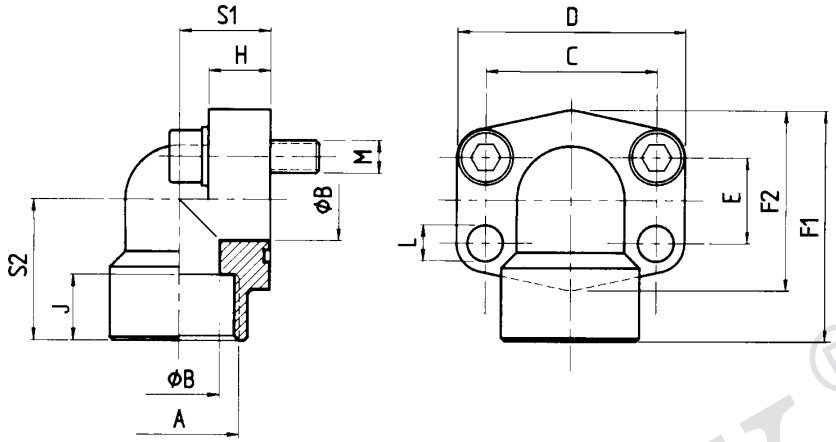

Material: 1 ST 44.3 (FE 430) ST 52.3 (FE 510).....Carbon Steel
2. 1.4404 316L.....Stainless Steel

Size	VE-LOCK® ITEM CODE	A	B	C	D	E	F_1	F_2	H	J	ØL	S_1	S_2	M (Screws)		Weight kg
														Metric	UNC	
3.000 Series																
$^1/_2$"	VEFL 252	R $^1/_2$"	13	38.10	54	17.48	60	48	16.0	19	9.0	20	37	M 8 x 30	$^5/_{16}$" x 1$^1/_4$"	0.35
$^1/_2$"	VEFL 253	R $^3/_8$"	13	38.10	54	17.48	60	48	16.0	19	9.0	20	37	M 8 x 30	$^5/_{16}$" x 1$^1/_4$"	0.35
$^3/_4$"	VEFL 254	R $^3/_4$"	19	47.63	65	22.23	63	52	18.0	19	11.0	24	38	M 10 x 35	$^3/_8$" x 1$^1/_2$"	0.55
1"	VEFL 255	R 1"	25	52.37	70	26.19	70	60	19.0	20	11.0	28	43	M 10 x 35	$^3/_8$" x 1$^1/_2$"	0.80
1$^1/_4$"	VEFL 256	R 1$^1/_4$"	32	58.72	79	30.18	85	73	21.0	22	11.5	34	51	M 10 x 40	$^7/_{16}$" x 1$^1/_2$"	1.30
1$^1/_2$"	VEFL 257	R 1$^1/_2$"	38	69.85	93	35.71	95	83	25.0	25	13.5	38	56	M 12 x 45	$^1/_2$" x 1$^3/_4$"	1.60
2"	VEFL 258	R 2"	51	77.77	110	42.88	110	94	25.0	28	13.5	42	65	M 12 x 45	$^5/_8$" x 2"	2.00
6.000 Series																
$^1/_2$"	VEFL 259	R $^1/_2$"	13	40.49	54	18.24	60	46	16.0	19	9	20	37	M 8 x 30	$^5/_{16}$" x 1$^1/_4$"	0.35
$^1/_2$"	VEFL 260	R $^3/_8$"	13	40.49	54	18.24	60	46	16.0	19	9	20	37	M 8 x 30	$^5/_{16}$" x 1$^1/_4$"	0.35
$^3/_4$"	VEFL 261	R $^3/_4$"	19	50.80	70	23.80	70	56	19.0	20	11	28	43	M 10 x 35	$^3/_8$" x 1$^1/_2$"	0.80
1"	VEFL 262	R 1"	25	57.15	79	27.76	85	72	21.0	22	13	34	51	M 12 x 45	$^7/_{16}$" x 1$^3/_4$"	1.30
1$^1/_4$"	VEFL 263	R 1$^1/_4$"	32	66.68	93	31.75	95	75	25.0	25	15*	38	56	M 14 x 50	$^1/_2$" x 1$^3/_4$"	1.60
1$^1/_2$"	VEFL 264	R 1$^1/_2$"	38	79.38	110	36.50	94	94	25.0	28	17	42	65	M 16 x 50	$^5/_8$" x 2"	2.00
2"	VEFL 265	R 2"	51	96.82	134	50.00	150	106	76.5	28	21	60	92	M 20 x 110	-	8.20

VE-LOCK®

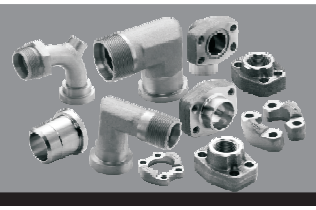

SAE-NPT THREADED 90^{0}ELBOW

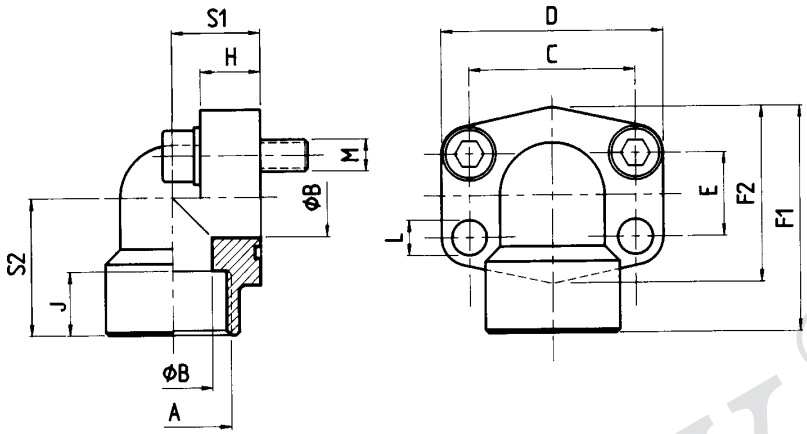

Material: 1 ST 44.3 (FE 430) ST 52.3 (FE 510).....Carbon Steel
2. 1.4404 316L.....Stainless Steel

Size	VE-LOCK® ITEM CODE	A	B	C	D	E	F_1	F_2	H	J	ØL	S_1	S_2	M (Screws)		Weight kg
														Metric	UNC	
3.000 Series																
$^1/_2$"	VEFL 266	$^1/_2$"NPT	13	38.10	54	17.48	60	48	16.0	19	9.0	20	37	M 8 x 30	$^5/_{16}$" x 1$^1/_4$"	0.35
$^1/_2$"	VEFL 267	$^3/_8$"NPT	13	38.10	54	17.48	60	48	16.0	19	9.0	20	37	M 8 x 30	$^5/_{16}$" x 1$^1/_4$"	0.35
$^3/_4$"	VEFL 268	$^3/_4$"NPT	19	47.63	65	22.23	63	52	18.0	19	11.0	24	38	M 10 x 35	$^3/_8$" x 1$^1/_2$"	0.55
1"	VEFL 269	1"NPT	25	52.37	70	26.19	70	60	19.0	20	11.0	28	43	M 10 x 35	$^3/_8$" x 1$^1/_2$"	0.80
1$^1/_4$"	VEFL 270	1$^1/_4$"NPT	32	58.72	79	30.18	85	73	21.0	22	11.5	34	51	M 10 x 40	$^7/_{16}$" x 1$^1/_2$"	1.30
1$^1/_2$"	VEFL 271	1$^1/_2$"NPT	38	69.85	93	35.71	95	83	25.0	25	13.5	38	56	M 12 x 45	$^1/_2$" x 1$^3/_4$"	1.60
2"	VEFL 272	2"NPT	51	77.77	110	42.88	110	94	25.0	28	13.5	42	65	M 12 x 45	$^5/_8$" x 2"	2.00
6.000 Series																
$^1/_2$"	VEFL 273	$^1/_2$"NPT	13	40.49	54	18.24	60	46	16.0	19	9.0	20	37	M 8 x 30	$^5/_{16}$" x 1$^1/_4$"	0.35
$^1/_2$"	VEFL 274	$^3/_8$"NPT	13	40.49	54	18.24	60	46	16.0	19	9.0	20	37	M 8 x 30	$^5/_{16}$" x 1$^1/_4$"	0.35
$^3/_4$"	VEFL 275	$^3/_4$"NPT	19	50.80	70	23.80	70	55	19.0	20	11.0	28	43	M 10 x 35	$^3/_8$" x 1$^1/_2$"	0.80
1"	VEFL 276	1"NPT	25	57.15	79	27.76	85	72	21.0	22	13.0	34	51	M 12 x 45	$^7/_{16}$" x 1$^3/_4$"	1.30
1$^1/_4$"	VEFL 277	1$^1/_4$"NPT	32	66.68	93	31.75	95	75	25.0	25	15.0*	38	56	M 14 x 50	$^1/_2$" x 1$^3/_4$"	1.60
1$^1/_2$"	VEFL 278	1$^1/_2$" NPT	38	79.38	110	36.50	94	110	25.0	28	17.0	42	65	M 16 x 50	$^5/_8$" x 2"	2.00

VE-LOCK®

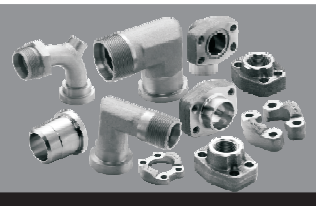

SAE-SOCKET WELD 90^{0}ELBOW

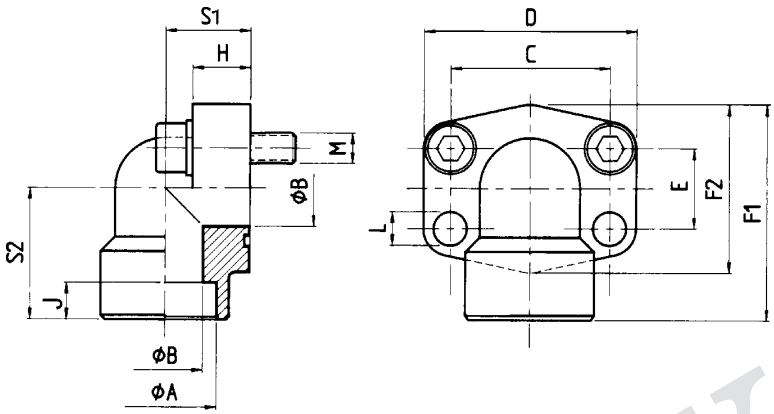

Material: 1 ST 44.3 (FE 430) ST 52.3 (FE 510).....Carbon Steel
2. 1.4404 316L.....Stainless Steel

Size	VE-LOCK® ITEM CODE	A	B	C	D	E	F_1	F_2	H	J	ØL	S_1	S_2	M (Screws)		Weight kg
														Metric	UNC	
3.000 Series																
$^1/_2$"	VEFL 279	21.6	13	38.10	54	17.48	60	48	16.0	10	9.0	20	37	M 8 x 30	$^5/_{16}$" x 1$^1/_4$"	0.35
$^1/_2$"	VEFL 280	17.5	13	38.10	54	17.48	60	48	16.0	10	9.0	20	37	M 8 x 30	$^5/_{16}$" x 1$^1/_4$"	0.35
$^3/_4$"	VEFL 281	27.2	19	47.63	65	22.23	63	50	18.0	10	11.0	24	38	M 10 x 35	$^3/_8$" x 1$^1/_2$"	0.55
1"	VEFL 282	34.0	25	52.37	70	26.19	70	60	19.0	12	11.0	28	43	M 10 x 35	$^3/_8$" x 1$^1/_2$"	0.80
1$^1/_4$"	VEFL 283	42.8	32	58.72	79	30.18	85	68	21.0	14	11.5	34	51	M 10 x 40	$^7/_{16}$" x 1$^1/_2$"	1.30
1$^1/_2$"	VEFL 284	48.6	38	69.85	93	35.71	95	78	25.0	16	13.5	38	56	M 12 x 45	$^1/_2$" x 1$^3/_4$"	1.60
2"	VEFL 285	61.0	51	77.77	110	42.88	110	90	25.0	18	13.5	42	65	M 12 x 45	$^5/_8$" x 2"	2.00
6.000 Series																
$^1/_2$"	VEFL 286	21.6	13	40.49	54	18.24	60	48	16.0	10	9.0	20	37	M 8 x 30	$^5/_{16}$" x 1$^1/_4$"	0.35
$^1/_2$"	VEFL 287	17.5	13	40.49	54	18.24	60	48	16.0	10	9.0	20	37	M 8 x 30	$^5/_{16}$" x 1$^1/_4$"	0.35
$^3/_4$"	VEFL 288	27.2	19	50.80	70	23.80	70	60	19.0	12	11.0	28	43	M 10 x 35	$^3/_8$" x 1$^1/_2$"	0.80
1"	VEFL 289	34.0	25	57.15	79	27.76	85	70	21.0	14	13.0	34	51	M 12 x 45	$^7/_{16}$" x 1$^3/_4$"	1.30
1$^1/_4$"	VEFL 290	42.8	32	66.68	93	31.75	95	78	25.0	16	15.0*	38	56	M 14 x 50	$^1/_2$" x 1$^3/_4$"	1.60
1$^1/_2$"	VEFL 291	48.6	38	79.38	110	36.50	110	94	25.0	18	17.5	42	65	M 16 x 50	$^5/_8$" x 2"	2.00
2"	VEFL 292	61.0	51	96.82	134	44.50	150	106	76.5	18	21.0	60	92	M 20 x 110	-	8.20

VE-LOCK®

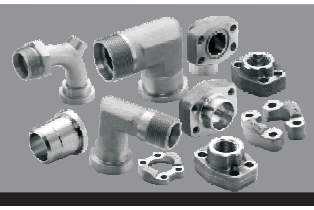

SAE-BUTT WELD 90°ELBOW

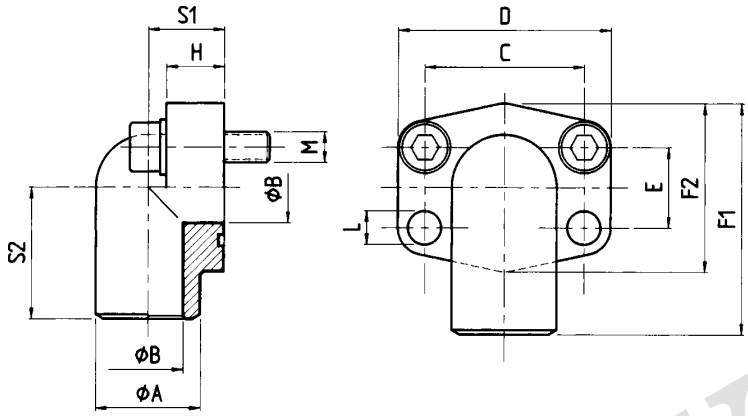

Material: 1 ST 44.3 (FE 430) ST 52.3 (FE 510)

Size	VE-LOCK® ITEM CODE	A	B	C	D	E	F_1	F_2	H	L	S_1	S_2	M (Screws)		Weight kg
													Metric	UNC	
3.000 Series															
$^3/_4$"	VEFL 293	27.0	19	47.63	70	22.23	63	50	21.0	11.0	23.0	41	M 10 x 40	-	0.65
1"	VEFL 294	34.5	23	52.37	75	26.19	72	60	24.0	11.0	25.0	48	M 10 x 45	-	0.85
$1^1/_4$"	VEFL 295	43.0	31	58.72	86	30.18	82	68	25.0	11.5	27.0	54	M 10 x 45	-	1.15
$1^1/_2$"	VEFL 296	50.0	35	69.85	97	35.71	92	78	29.0	14.0	31.5	57	M 12 x 50	-	1.70
2"	VEFL 297	65.0	48	77.77	100	42.88	99	90	50.0	14.0	37.5	63	M 12 x 70	-	2.15
6.000 Series															
$^3/_4$"	VEFL 298	28.0	19	50.80	71	23.80	70	60	19.0	11.0	22.0	40	M 10 x 35	-	0.50
1"	VEFL 299	34.0	25	57.15	81	27.76	82	70	24.0	13.0	27.0	47	M 10 x 45	-	0.80
$1^1/_4$"	VEFL 300	42.0	32	66.68	95	31.75	95	78	27.0	15.0	32.0	56	M 14 x 50	-	1.15
$1^1/_2$"	VEFL 301	48.0	38	79.38	113	36.50	115	94	30.0	17.0	40.0	68	M 16 x 50	-	2.00
2"	VEFL 302	65.0	47	96.82	134	44.50	150	106	76.5	21.0	60.0	92	M 20 x 110	-	8.20

VE-LOCK®

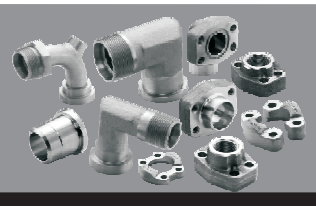

SAE-SOCKET WELD 90^{0}ELBOW FOR METRIC PIPES

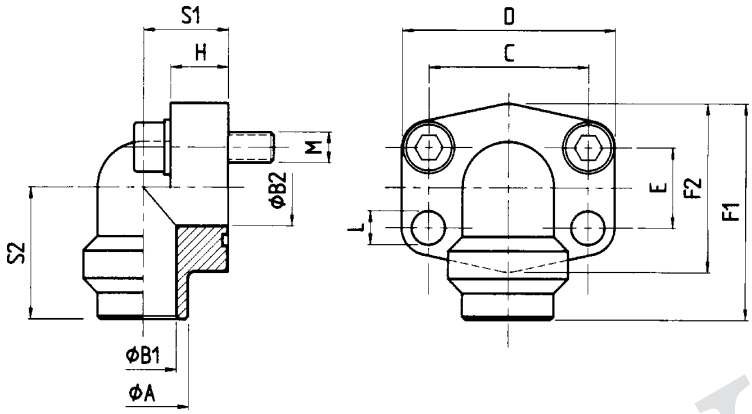

Material: 1 ST 44.3 (FE 430) ST 52.3 (FE 510).....Carbon Steel
2. 1.4404 316L.....Stainless Steel

3.000 Series																	
Size	VE-LOCK® ITEM CODE	Tube	A	B_1	B_2	C	D	E	F_1	F_2	H	S_1	S_2	ØL	M (Screws)		Weight kg
															Metric	UNC	
$^1/_2$"	VEFL 303	20 x 3	20	14	13	38.10	54	17.48	60	48	16	20	37	9.0	M 8 x 30	$^5/_{16}$" x 1$^1/_4$"	0.33
$^1/_2$"	VEFL 304	22 x 2	22	18	13	38.10	54	17.48	60	48	16	20	37	9.0	M 8 x 30	$^5/_{16}$" x 1$^1/_4$"	0.34
$^1/_2$"	VEFL 305	25 x 3	25	19	13	38.10	54	17.48	60	48	16	20	37	9.0	M 8 x 30	$^5/_{16}$" x 1$^1/_4$"	0.35
$^1/_2$"	VEFL 306	28 x 3	28	22	13	38.10	54	17.48	60	48	16	20	37	9.0	M 8 x 30	$^5/_{16}$" x 1$^1/_4$"	0.36
$^3/_4$"	VEFL 307	25 x 3	25	19	19	47.63	65	22.23	63	50	18	24	38	11.0	M 10 x 35	$^3/_8$" x 1$^1/_2$"	0.49
$^3/_4$"	VEFL 308	28 x 3	28	22	19	47.63	65	22.23	63	50	18	24	38	11.0	M 10 x 35	$^3/_8$" x 1$^1/_2$"	0.50
$^3/_4$"	VEFL 309	30 x 4	30	22	19	47.63	65	22.23	63	50	18	24	38	11.0	M 10 x 35	$^3/_8$" x 1$^1/_2$"	0.51
$^3/_4$"	VEFL 310	35 x 4	35	27	19	47.63	65	22.23	63	50	18	24	38	11.0	M 10 x 35	$^3/_8$" x 1$^1/_2$"	0.55
1"	VEFL 311	30 x 4	30	22	25	52.37	70	26.19	70	60	19	28	43	11.0	M 10 x 35	$^3/_8$" x 1$^1/_2$"	0.70
1"	VEFL 312	35 x 4	35	27	25	52.37	70	26.19	70	60	19	28	43	11.0	M 10 x 35	$^3/_8$" x 1$^1/_2$"	0.73
1"	VEFL 313	38 x 4	38	30	25	52.37	70	26.19	70	60	19	28	43	11.0	M 10 x 35	$^3/_8$" x 1$^1/_2$"	0.76
1"	VEFL 314	42 x 3	42	36	25	52.37	70	26.19	70	60	19	28	43	11.0	M 10 x 35	$^3/_8$" x 1$^1/_2$"	0.80
1$^1/_4$"	VEFL 315	38 x 4	38	30	32	58.72	79	30.18	85	68	21	34	51	11.5	M 10 x 40	$^7/_{16}$" x 1$^1/_2$"	1.20
1$^1/_4$"	VEFL 316	42 x 3	42	36	32	58.72	79	30.18	85	68	21	34	51	11.5	M 10 x 40	$^7/_{16}$" x 1$^1/_2$"	1.24
1$^1/_4$"	VEFL 317	48.3 x 4.5	49	39	32	58.72	79	30.18	85	68	21	34	51	11.5	M 10 x 40	$^7/_{16}$" x 1$^1/_2$"	1.30
1$^1/_2$"	VEFL 318	38 x 4	38	30	38	69.85	93	35.71	95	78	25	38	55	13.5	M 12 x 45	$^1/_2$" x 1$^3/_4$"	1.50
1$^1/_2$"	VEFL 319	42 x 3	42	36	38	69.85	93	35.71	95	78	25	38	55	13.5	M 12 x 45	$^1/_2$" x 1$^3/_4$"	1.53
1$^1/_2$"	VEFL 320	48.3 x 4.5	49	39	38	69.85	93	35.71	95	78	25	38	55	13.5	M 12 x 45	$^1/_2$" x 1$^3/_4$"	1.60
2"	VEFL 321	60.3 x 5.6	61	51	45	77.77	110	42.88	110	90	25	42	65	13.5	M 12 x 45	$^1/_2$" x 1$^3/_4$"	1.93
2"	VEFL 322	76.1 x 7.1	77	51	45	77.77	110	42.88	110	90	25	42	65	13.5	M 12 x 45	$^1/_2$" x 1$^3/_4$"	2.00

VE-LOCK®

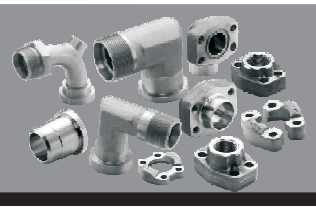

SAE-SOCKET WELD 90°ELBOW FOR METRIC PIPES

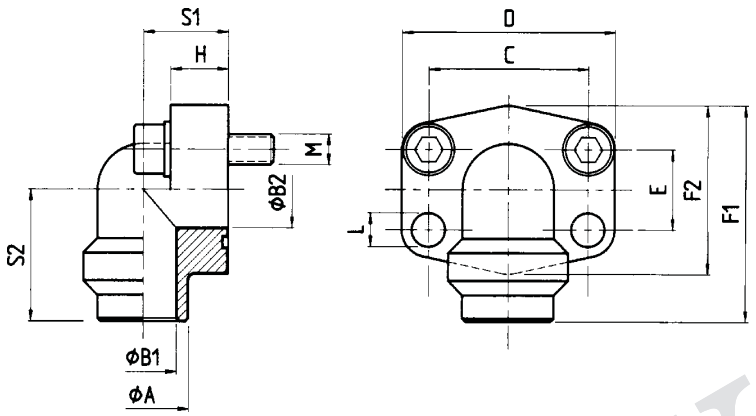

Material: 1 ST 44.3 (FE 430) ST 52.3 (FE 510).....Carbon Steel
2. 1.4404 316L.....Stainless Steel

6.000 Series																	
Size	VE-LOCK® ITEM CODE	Tube	A	B_1	B_2	C	D	E	F_1	F_2	H	S_1	S_2	ØL	M (Screws)		Weight kg
															Metric	UNC	
$^1/_2$"	VEFL 323	20 x 3	20	14	13	40.49	56.4	17.48	60	48	16	20	37	9.0	M 8 x 30	$^5/_{16}$" x 1$^1/_4$"	0.35
$^1/_2$"	VEFL 324	28 x 4	25	17	13	40.49	56.4	17.48	60	48	16	20	37	9.0	M 8 x 30	$^5/_{16}$" x 1$^1/_4$"	0.36
$^3/_4$"	VEFL 325	25 x 4	25	17	19	50.80	71.3	22.23	70	60	19	28	43	11.0	M 10 x 35	$^3/_8$" x 1$^1/_2$"	0.74
$^3/_4$"	VEFL 326	30 x 4	30	22	19	50.80	71.3	22.23	70	60	19	28	43	11.0	M 10 x 35	$^3/_8$" x 1$^1/_2$"	0.80
1"	VEFL 327	30 x 4	30	22	25	57.15	81.0	22.23	85	70	21	34	51	13.0	M 12 x 45	$^7/_{16}$" x 1$^3/_4$"	1.25
1"	VEFL 328	38 x 5	38	28	25	57.15	81.0	22.23	85	70	21	34	51	13.0	M 12 x 45	$^7/_{16}$" x 1$^3/_4$"	1.30
1$^1/_4$"	VEFL 329	38 x 5	38	28	32	66.68	95.2	26.19	95	78	25	38	56	14.5*1	M 14 x 45	$^1/_2$" x 1$^3/_4$"	1.52
1$^1/_4$"	VEFL 330	48.3 x 8	49	32	32	66.68	95.2	26.19	95	78	25	38	56	14.5*1	M 14 x 45	$^1/_2$" x 1$^3/_4$"	1.60
1$^1/_2$"	VEFL 331	38 x 5	38	28	38	79.38	112.8	36.50	110	94	25	42	65	17.0	M 16 x 50	$^5/_8$" x 2"	1.84
1$^1/_2$"	VEFL 332	48.3 x 8	49	32	38	79.38	112.8	36.50	110	94	25	42	65	17.0	M 16 x 50	$^5/_8$" x 2"	1.92
1$^1/_2$"	VEFL 333	60.3 x 10	61	40	38	79.38	112.8	30.18	110	94	25	42	65	17.5	M 16 x 50	$^5/_8$" x 2"	2.00
2"	VEFL 334	60.3 x 10	61	40	51	96.82	134.0	30.18	150	106	76.5	60	92	21.0	M 20 x 110	-	8.20
2"	VEFL 335	76.1 x 12.5	74	50	51	96.82	134.0	42.88	150	106	76.5	60	92	21.0	M 20 x 110	-	8.20

VE-LOCK®

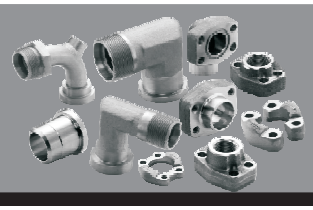

SAE-PIPE THREADED COMPANION FLANGE

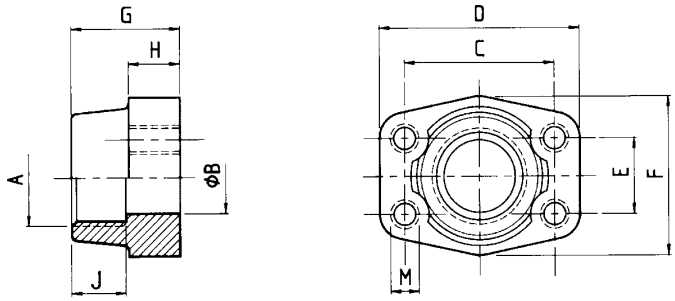

Material: 1 ST 44.3 (FE 430).....Carbon Steel
2. 1.4404 316L.....Stainless Steel

3.000 Series													
Size	VE-LOCK® ITEM CODE	A	B	C	D	E	F	G	H	J	M(Screws)		Weight kg
											Metric	UNC	
1/2"	VEFL 336	R 1/2"	13	38.10	54	17.48	46	36	16	19	M 8	5/16"	0.25
1/2"	VEFL 337	R 3/8"	13	38.10	54	17.48	46	36	16	19	M 8	5/16"	0.28
3/4"	VEFL 338	R 3/4"	19	47.63	65	22.23	50	36	18	19	M 10	3/8"	0.39
3/4"	VEFL 339	R 1/2"	13	47.63	65	22.23	50	36	18	19	M 10	3/8"	0.42
1"	VEFL 340	R 1"	25	52.37	70	26.19	55	38	18	22	M 10	3/8"	0.46
1"	VEFL 341	R 3/4"	19	52.37	70	26.19	55	35	21	19	M 10	3/8"	0.49
1 1/4"	VEFL 342	R 1 1/4"	32	58.72	79	30.18	68	41	21	22	M 10	7/16"	0.66
1 1/4"	VEFL 343	R 1"	25	58.72	81	30.18	65	42	25	22	M 10	7/16"	0.75
1 1/2"	VEFL 344	R 1 1/2"	38	69.85	93	35.71	78	45	25	24	M 12	1/2"	1.05
1 1/2"	VEFL 345	R 1 1/4"	32	69.85	95	35.71	78	45	27	24	M 12	1/2"	1.10
2"	VEFL 346	R 2"	51	77.77	102	42.88	90	45	25	30	M 12	1/2"	1.19
2"	VEFL 347	R 1 1/2"	38	77.77	102	42.88	90	45	25	26	M 12	1/2"	1.25
2 1/2"	VEFL 348	R 2 1/2"	63	88.90	114	50.80	105	50	25	30	M 12	1/2"	1.40
2 1/2"	VEFL 349	R 2"	51	88.90	114	50.80	105	50	25	30	M 12	1/2"	1.45
3"	VEFL 350	R 3"	73	106.38	134	61.93	124	50	27	34	M 16	5/8"	2.15
3"	VEFL 351	R 2 1/2"	63	106.38	134	61.93	124	50	27	30	M 16	5/8"	2.25
3 1/2"	VEFL 352	R 3 1/2"	89	120.65	152	69.85	136	48	27	34	M 16	5/8"	2.40
3 1/2"	VEFL 353	R 3"	73	120.65	152	69.85	136	48	27	34	M 16	5/8"	2.50
4"	VEFL 354	R 3"	99	130.18	162	77.77	146	48	27	34	M 16	5/8"	2.85
4"	VEFL 355	R 3 1/2"	89	130.18	162	77.77	146	48	27	34	M 16	5/8"	3.00
6.000 Series													
1/2"	VEFL 356	R 1/2"	13	40.49	54	18.24	46	36	16	19	M 8	5/16"	0.26
1/2"	VEFL 357	R 3/8"	13	40.49	54	18.24	46	36	16	19	M 8	5/16"	0.29
3/4"	VEFL 358	R 3/4"	19	50.80	71	23.80	55	35	21	22	M 10	3/8"	0.50
3/4"	VEFL 359	R 1/2"	13	50.80	71	23.80	55	35	21	22	M 10	3/8"	0.55
1"	VEFL 360	R 1"	25	57.16	81	27.76	65	42	25	24	M 12	7/16"	0.76
1"	VEFL 361	R 3/4"	19	57.16	81	27.76	65	42	25	24	M 12	7/16"	0.80
1 1/4"	VEFL 362	R 1 1/4"	32	66.68	95	31.75	78	45	27	25	M 14	1/2"	1.20
1 1/4"	VEFL 363	R 1"	25	66.68	95	31.75	78	45	27	25	M 14	1/2"	1.30
1 1/2"	VEFL 364	R 1 1/2"	38	79.38	112	36.50	94	50	30	28	M 16	5/8"	1.65
1 1/2"	VEFL 365	R 1 1/4"	32	79.38	112	36.50	94	50	30	28	M 16	5/8"	1.75
2"	VEFL 366	R 2"	51	96.82	134	44.45	114	65	37	30	M 20	3/4"	2.45
2"	VEFL 367	R 1 1/2"	38	96.82	134	44.45	114	65	37	30	M 20	3/4"	2.55

VE-LOCK ®

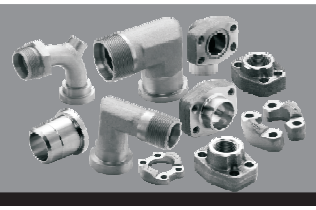

SAE-NPT THREADED FLANGE COMPANION

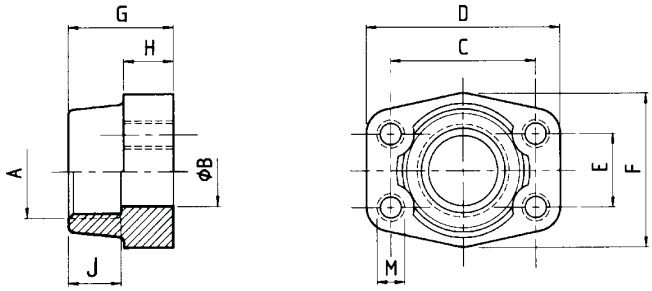

Material: 1 ST 44.3 (FE 430).....Carbon Steel
2. 1.4404 316L.....Stainless Steel

3.000 Series													
Size	VE-LOCK® ITEM CODE	A	B	C	D	E	F	G	H	J	M (Screws)		Weight kg
											Metric	UNC	
1/2"	VEFL 368	1/2" NPT	13	38.10	54	17.48	46	36	16	19	M 8	5/16"	0.25
1/2"	VEFL 369	3/8" NPT	13	38.10	54	17.48	46	36	16	19	M 8	5/16"	0.28
3/4"	VEFL 370	3/4" NPT	19	47.63	65	22.23	50	36	18	19	M 10	3/8"	0.39
3/4"	VEFL 371	1/2" NPT	13	47.63	65	22.23	50	36	18	19	M 10	3/8"	0.42
1"	VEFL 372	1" NPT	25	52.37	70	26.19	55	38	18	22	M 10	3/8"	0.46
1"	VEFL 373	3/4" NPT	19	52.37	70	26.19	55	35	21	19	M 10	3/8"	0.49
1 1/4"	VEFL 374	1 1/4" NPT	32	58.72	79	30.18	68	41	21	22	M 10	7/16"	0.66
1 1/4"	VEFL 375	1" NPT	25	58.72	81	30.18	65	42	25	22	M 10	7/16"	0.75
1 1/2"	VEFL 376	1 1/2" NPT	38	69.85	93	35.71	78	45	25	24	M 12	1/2"	1.05
1 1/2"	VEFL 377	1 1/4" NPT	32	69.85	95	35.71	78	45	27	24	M 12	1/2"	1.10
2"	VEFL 378	2" NPT	51	77.77	102	42.88	90	45	25	30	M 12	1/2"	1.19
2"	VEFL 379	1 1/2" NPT	38	77.77	102	42.88	90	45	25	26	M 12	1/2"	1.25
2 1/2"	VEFL 380	2 1/2" NPT	63	88.90	114	50.80	105	50	25	30	M 12	1/2"	1.40
3"	VEFL 381	3" NPT	73	106.38	134	61.93	124	50	27	34	M 16	5/8"	2.15
3 1/2"	VEFL 382	3 1/2" NPT	89	120.65	152	69.85	136	48	27	34	M 16	5/8"	2.40
4"	VEFL 383	4" NPT	99	130.18	162	77.77	146	48	27	34	M 16	5/8"	2.85
6.000 Series													
1/2"	VEFL 384	1/2" NPT	13	40.49	54	18.24	46	36	16	19	M 8	5/16"	0.26
1/2"	VEFL 385	3/8" NPT	13	40.49	54	18.24	46	36	16	19	M 8	5/16"	0.29
3/4"	VEFL 386	3/4" NPT	19	50.80	71	23.80	55	35	21	22	M 10	3/8"	0.50
3/4"	VEFL 387	1/2" NPT	13	50.80	71	23.80	55	35	21	22	M 10	3/8"	0.55
1"	VEFL 388	1" NPT	25	57.15	81	27.76	65	42	25	24	M 12	7/16"	0.76
1"	VEFL 389	3/4" NPT	19	57.15	81	27.76	65	42	25	24	M 12	7/16"	0.80
1 1/4"	VEFL 390	1 1/4" NPT	32	66.68	95	31.75	78	45	27	25	M 14	1/2"	1.20
1 1/4"	VEFL 391	1" NPT	25	66.68	95	31.75	78	45	27	25	M 14	1/2"	1.30
1 1/2"	VEFL 392	1 1/2" NPT	38	79.38	112	36.50	94	50	30	28	M 16	5/8"	1.65
1 1/2"	VEFL 393	1 1/4" NPT	32	79.38	112	36.50	94	50	30	28	M 16	5/8"	1.75
2"	VEFL 394	2" NPT	51	96.82	134	44.45	114	65	37	30	M 20	3/4"	2.45
2"	VEFL 395	1 1/2" NPT	38	96.82	134	44.45	114	65	37	30	M 20	3/4"	2.55

VE-LOCK®

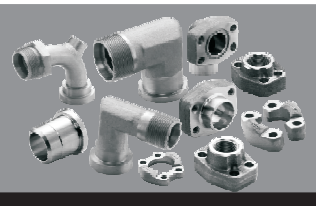

SAE-SOCKET WELD FLANGE COMPANION

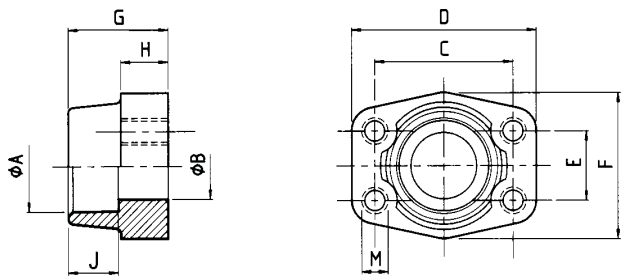

Material: 1 ST 44.3 (FE 430).....Carbon Steel
2. 1.4404 316L.....Stainless Steel

Size	VE-LOCK® ITEM CODE	A	B	C	D	E	F	G	H	J	M (Screws)		Weight kg
											Metric	UNC	
3.000 Series													
1/2"	VEFL 396	21.6	13	38.10	54	17.48	46	36	16	19	M 8	5/16"	0.25
1/2"	VEFL 397	17.5	13	38.10	54	17.48	46	36	16	19	M 8	5/16"	0.28
1/2"	VEFL 398	20.3	13	38.10	54	17.48	46	36	16	19	M 8	5/16"	0.25
3/4"	VEFL 399	27.2	19	47.63	65	22.23	50	36	18	19	M 10	3/8"	0.39
3/4"	VEFL 400	25.3	19	47.63	65	22.23	50	36	18	19	M 10	3/8"	0.39
1"	VEFL 401	34.0	25	52.37	70	26.19	55	38	18	19	M 10	3/8"	0.46
1"	VEFL 402	30.3	25	52.37	70	26.19	55	38	18	19	M 10	3/8"	0.46
1 1/4"	VEFL 403	42.8	32	58.72	79	30.18	68	41	21	22	M 10	7/16"	0.66
1 1/4"	VEFL 404	38.3	32	58.72	79	30.18	68	41	21	22	M 10	7/16"	0.66
1 1/2"	VEFL 405	48.6	38	69.85	93	35.71	78	45	25	24	M 12	1/2"	1.05
1 1/2"	VEFL 406	50.5	38	69.85	93	35.71	78	45	25	24	M 12	1/2"	1.05
2"	VEFL 407	61.0	51	77.77	102	42.88	90	45	25	26	M 12	1/2"	1.19
2 1/2"	VEFL 408	76.6	63	88.90	114	50.80	105	50	25	30	M 12	1/2"	1.40
3"	VEFL 409	90.5	73	106.38	134	61.93	124	50	27	34	M 16	5/8"	2.15
3 1/2"	VEFL 410	103.0	89	120.65	152	69.85	136	48	27	34	M 16	5/8"	2.40
4"	VEFL 411	115.5	99	130.18	162	77.77	146	48	27	34	M 16	5/8"	2.85
6.000 Series													
1/2"	VEFL 412	21.6	13	40.49	54	18.24	46	36	16	19	M 8	5/16"	0.26
1/2"	VEFL 413	17.5	13	40.49	54	18.24	46	36	16	19	M 8	5/16"	0.29
1/2"	VEFL 414	20.3	13	40.49	54	18.24	46	36	16	19	M 8	5/16"	0.26
3/4"	VEFL 415	27.2	19	50.80	71	23.80	55	35	21	22	M 10	3/8"	0.50
3/4"	VEFL 416	25.3	19	50.80	71	23.80	55	35	21	22	M 10	3/8"	0.50
1"	VEFL 417	34.0	25	57.15	81	27.76	65	42	25	22	M 12	7/16"	0.76
1"	VEFL 418	30.3	25	57.15	81	27.76	65	42	25	22	M 12	7/16"	0.76
1 1/4"	VEFL 419	42.8	32	66.68	95	31.75	78	45	27	25	M 14	1/2"	1.20
1 1/4"	VEFL 420	38.3	32	66.68	95	31.75	78	45	27	25	M 14	1/2"	1.20
1 1/2"	VEFL 421	48.6	38	79.38	112	36.50	94	50	30	28	M 16	5/8"	1.65
1 1/2"	VEFL 422	50.5	38	79.38	112	36.50	94	50	30	28	M 16	5/8"	1.65
2"	VEFL 423	61.0	51	96.82	134	44.45	114	65	37	24	M 20	3/4"	2.45
2 1/2"	VEFL 424	76.6	63	123.80	180	58.70	152	80	45	30	M 24	-	8.30

VE-LOCK ®

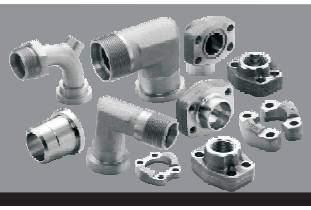

SAE-BUTT WELD COMPANION FLANGE

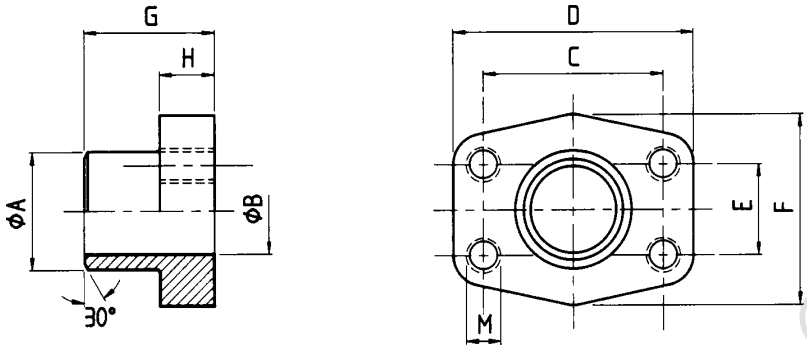

Material: 1 ST 44.3 (FE 430).....Carbon Steel
2. 1.4404 316L.....Stainless Steel

Size	VE-LOCK® ITEM CODE	A	B	C	D	E	F	G	H	M (Screws) Metric	M (Screws) UNC	Weight kg
3.000 Series												
1/2"	VEFL 425	21.5	13	38.10	54	17.48	46	36	16	M 8	5/16"	0.25
1/2"	VEFL 426	17.5	13.0	38.10	54	17.48	46	36	16	M 8	5/16"	0.28
3/4"	VEFL 427	28.0	19.0	47.63	65	22.23	50	36	18	M 10	3/8"	0.39
1"	VEFL 428	34.0	25.0	52.37	70	26.19	55	38	18	M 10	3/8"	0.46
1 1/4"	VEFL 429	42.8	32.0	58.72	79	30.18	68	41	21	M 10	7/16"	0.66
1 1/2"	VEFL 430	48.6	38.0	69.85	93	35.71	78	44	25	M 12	1/2"	1.05
2"	VEFL 431	61.0	51.0	77.77	102	42.88	90	45	25	M 12	1/2"	1.19
2 1/2"	VEFL 432	77.0	63.0	88.90	114	50.80	105	50	25	M 12	1/2"	1.40
3"	VEFL 433	92.0	73.0	106.38	134	61.93	124	50	27	M 16	5/8"	2.15
3 1/2"	VEFL 434	103.0	89.0	120.65	152	69.85	136	48	27	M 16	5/8"	2.40
4"	VEFL 435	115.5	99.0	130.18	162	77.77	146	48	27	M 16	5/8"	2.85
5"	VEFL 436	140.2	120	152.40	184	92.08	180	50	28	M 16	5/8"	5.20
6.000 Series												
1/2"	VEFL 437	21.6	13.0	40.49	54	18.24	46	36	16	M 8	5/16"	0.26
1/2"	VEFL 438	17.5	13.0	40.49	54	18.24	46	36	16	M 8	5/16"	0.29
3/4"	VEFL 439	28.0	19.0	50.80	71	23.80	55	35	21	M 10	3/8"	0.50
1"	VEFL 440	34.0	25.0	57.15	79	27.76	68	41	21	M 12	7/16"	0.76
1 1/4"	VEFL 441	42.8	32.0	66.68	93	31.75	78	44	25	M 14	1/2"	1.20
1 1/4"	VEFL 442	42.8	29.0	66.68	93	31.75	78	44	25	M 14	1/2"	1.35
1 1/2"	VEFL 443	48.6	38.0	79.38	112	36.50	94	55	30	M 16	5/8"	1.65
1 1/2"	VEFL 444	48.6	34.0	79.38	112	36.50	94	55	30	M 16	5/8"	1.80
2"	VEFL 445	61.0	51.0	96.82	134	44.45	114	65	37	M 20	3/4"	2.45
2"	VEFL 446	61.0	43.0	96.82	134	44.45	114	65	37	M 20	3/4"	2.70
2 1/2"	VEFL 447	76.1	51.0	123.80	180	58.70	152	80	45	M 24	-	6.40
2 1/2"	VEFL 448	90.0	60.5	123.80	180	58.70	152	80	45	M 24	-	8.30

VE-LOCK®

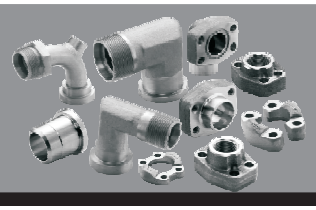

SAE BUTT WELD COMPANION FLANGE

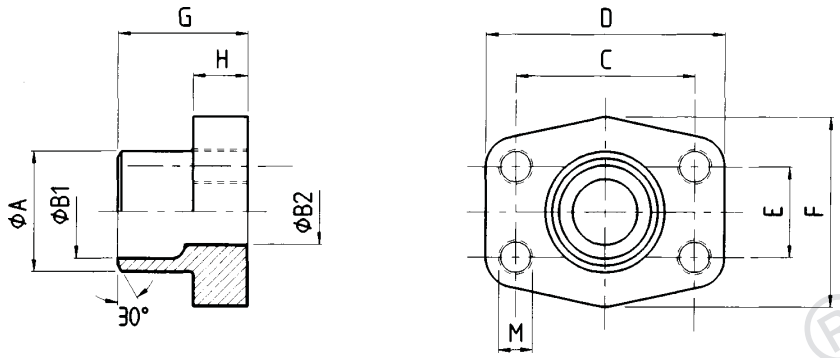

Material: 1 ST 44.3 (FE 430).....Carbon Steel
2. 1.4404 316L.....Stainless Steel

3.000 Series													
Size	VE-LOCK® ITEM CODE	Tube	A	B_1	B_2	C	D	E	F	G	H	M	Weight kg
1/2"	VEFL 449	20 x 3	20	14.0	14	38.10	54	17.48	46	35.0	16.0	M 8	0.28
1/2"	VEFL 450	22 x 3	22	16.0	13	38.10	54	17.48	46	35.0	16.0	M 8	0.28
3/4"	VEFL 451	25 x 3	25	19.0	19	47.63	65	22.23	50	36.0	18.0	M 10	0.39
3/4"	VEFL 452	28 x 3	28	21.5	19	47.63	65	22.23	50	36.0	18.0	M 10	0.39
1"	VEFL 453	30 x 4	30	22.0	22	52.37	70	26.19	55	38.0	18.0	M 10	0.46
1"	VEFL 454	35 x 3	35	27.0	25	52.37	70	26.19	55	38.0	18.0	M 10	0.47
1 1/4"	VEFL 455	38 x 4	38	30.0	30	58.72	79	30.18	68	41.0	21.0	M 10	0.66
1 1/4"	VEFL 456	42 x 3	43	36.0	31	58.72	79	30.18	68	41.0	21.0	M 10	0.66
1 1/2"	VEFL 457	38 x 4	38	30.0	30	69.85	93	35.71	78	44.5	24.5	M 12	1.05
1 1/2"	VEFL 458	42 x 3	42	36.0	36	69.85	93	35.71	78	44.5	24.5	M 12	1.05
1 1/2"	VEFL 459	48.3 x 4.5	49	38.0	38	69.85	93	35.71	78	44.5	24.5	M 12	1.05
2"	VEFL 460	60.3 x 5.6	61	49.0	49	77.77	102	42.88	90	45.0	25.0	M 12	1.20
2 1/2"	VEFL 461	76.1 x 7.1	77	62.0	62	88.90	114	50.80	105	50.0	25.0	M 12	1.40
3"	VEFL 462	76.1 x 7.1	77	62.0	62	106.38	134	61.93	125	51.0	26.0	M 16	2.15
6.000 Series													
1/2"	VEFL 463	20 x 3	20	14.0	14	40.49	54	18.24	46	34.0	16.0	M 8	0.29
3/4"	VEFL 464	20 x 3	20	14.0	14	50.80	71	23.80	55	35.0	21.0	M 10	0.50
3/4"	VEFL 465	25 x 4	25	17.0	17	50.80	71	23.80	55	35.0	21.0	M 10	0.53
1"	VEFL 466	25 x 4	25	17.0	17	57.15	81	27.76	65	42.0	25.0	M 12	0.76
1"	VEFL 467	30 x 4	30	22.0	22	57.15	81	27.76	65	42.0	25.0	M 12	0.80
1 1/4"	VEFL 468	30 x 4	30	22.0	22	66.68	95	31.75	78	44.0	25.0	M 14	1.20
1 1/4"	VEFL 469	38 x 6	38	26.0	26	66.68	95	31.75	78	44.0	25.0	M 14	1.29
1 1/2"	VEFL 470	38 x 6	38	26.0	26	79.38	112	36.50	94	56.0	28.0	M 16	1.52
1 1/2"	VEFL 471	48.3 x 8	49	32.0	32	79.38	112	36.50	94	56.0	28.0	M 16	1.57
1 1/2"	VEFL 472	60.3 x 8	61	40.0	40	79.38	112	36.50	94	56.0	28.0	M 16	1.65
2"	VEFL 473	60.3 x 10	61	40.0	40	96.82	134	44.45	114	65	33	M 20	2.45
2"	VEFL 474	76.1 x 12.5	76	48	48	96.82	134	44.45	114	80	33	M 20	2.96

VE-LOCK®

SAE BUTT WELD COMPANION FLANGE

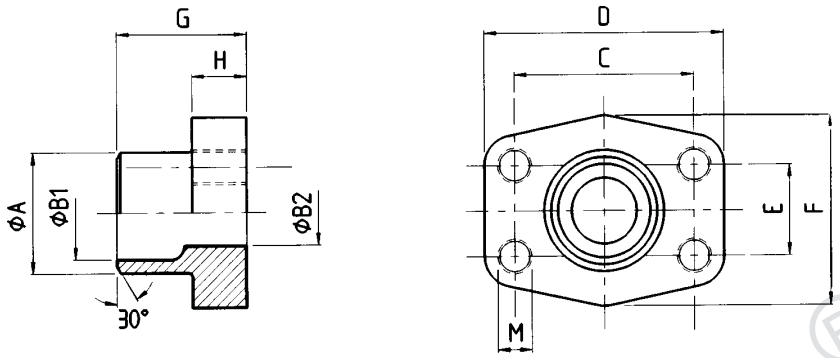

Material: 1 ST 44.3 (FE 430).....Carbon Steel
2. 1.4404 316L.....Stainless Steel

3.000 Series													
Size	VE-LOCK® ITEM CODE	Tube	A	B_1	B_2	C	D	E	F	G	H	M	Weight kg
1/2"	VEFL 475	21.3 x 2.6	22	16.0	13	38.10	54	17.48	46	35.0	16.0	M 8	0.28
3/4"	VEFL 476	26.9 x 2.6	28	21.5	19	47.63	65	22.23	50	35.0	18.0	M 10	0.39
1"	VEFL 477	33.7 x 3.2	35	27.0	25	52.37	70	26.19	55	38.0	18.0	M 10	0.46
1 1/4"	VEFL 478	42.4 x 3.2	43	36.0	31	58.72	79	30.18	68	41.0	21.0	M 10	0.66
1 1/2"	VEFL 479	48.3 x 3.2	49	42.0	38	69.85	93	35.71	78	44.5	24.5	M 12	1.05
2"	VEFL 480	48.3 x 3.2	49	42.0	42	77.77	102	42.88	90	45.0	25.0	M 12	1.20
2"	VEFL 481	60.3 x 3.6	61	53.0	49	77.77	102	42.88	90	45.0	25.0	M 12	1.25
2 1/2"	VEFL 482	60.3 x 3.6	61	53.0	53	88.90	114	50.80	105	50.0	25.0	M 12	1.29
2 1/2"	VEFL 483	76.1 x 3.6	77	70.0	62	88.90	114	50.80	105	50.0	25.0	M 12	1.40
3"	VEFL 484	88.9 x 3.6	90	82.0	74	106.38	134	61.93	124	51.0	26.0	M 16	2.15
3 1/2"	VEFL 485	88.9 x 3.6	90	82.0	82	120.65	152	69.85	136	48.0	26.0	M 16	2.40
3 1/2"	VEFL 486	76.1 x 3.6	77	70.0	70	120.65	152	69.85	136	48.0	26.0	M 16	2.40
4"	VEFL 487	88.9 x 3.6	90	82.0	82	130.18	162	77.77	146	48.0	26.0	M 16	2.69
4"	VEFL 488	114.3 x 3.6	115	107.0	102	130.18	162	77.77	146	48.0	26.0	M 16	2.85
5"	VEFL 489	139.7 x 4.0	141	-	131	152.40	190	92.10	170	28.0	28.0	M 16	2.80
5"	VEFL 490	139.7 x 4.0	140.2	131	120	152.40	184	92.08	180	50.0	28.0	M 16	5.00

VE-LOCK®

SAE-BLIND FLANGE

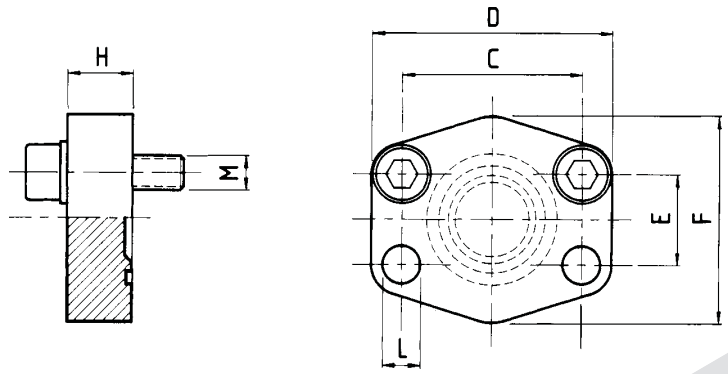

Material: 1 ST 44.3 (FE 430) ST 52.3 (FE 510).....Carbon Steel
2. 1.4404 316L.....Stainless Steel

3.000 Series										
Size	VE-LOCK® ITEM CODE	C	D	E	F	H	ØL	M (Screws)		Weight kg
								Metric	UNC	
$^1/_2$"	VEFL 491	38.10	56	17.48	48	16	9.0	M 8 x 30	$^5/_{16}$" x 1$^1/_4$"	0.20
$^3/_4$"	VEFL 492	47.63	65	22.23	50	16	11	M 10 x 35	$^3/_8$" x 1$^1/_2$"	0.30
1"	VEFL 493	52.37	70	26.19	60	19	11.0	M 10 x 35	$^3/_8$" x 1$^1/_2$"	0.37
1$^1/_4$"	VEFL 494	58.72	79	30.18	68	18	11.5	M 10 x 40	$^7/_{16}$" x 1$^1/_2$"	0.54
1$^1/_2$"	VEFL 495	69.85	93	35.71	78	20	13.5	M 12 x 45	$^1/_2$" x 1$^3/_4$"	0.90
2"	VEFL 496	77.77	102	42.88	90	20	13.5	M 12 x 45	$^1/_2$" x 1$^3/_4$"	1.00
2$^1/_2$"	VEFL 497	88.90	114	50.80	105	20	13.5	M 12 x 45	$^1/_2$" x 1$^3/_4$"	1.35
3"	VEFL 498	106.38	134	61.93	124	24	17.5	M 16 x 50	$^5/_8$" x 2"	2.35
3$^1/_2$"	VEFL 499	120.65	152	69.85	136	22	17.5	M 16 x 50	$^5/_8$" x 2"	2.90
4"	VEFL 500	130.18	162	77.77	146	25	17.5	M 16 x 50	$^5/_8$" x 2"	3.90
5"	VEFL 501	152.40	190	92.08	170	28	17.5	M 16 x 50	$^5/_8$" x 2"	4.00
6.000 Series										
$^1/_2$"	VEFL 502	40.49	56	18.24	48	16	9.0	M 8 x 30	$^5/_{16}$" x 1$^1/_4$"	0.20
$^3/_4$"	VEFL 503	50.80	71	23.80	60	19	11.0	M 10 x 35	$^3/_8$" x 1$^1/_2$"	0.48
1"	VEFL 504	57.15	81	27.76	70	24	13	M 12 x 45	$^7/_{16}$" x 1$^1/_2$"	0.77
1$^1/_4$"	VEFL 505	66.68	95	31.75	78	27	15*	M 14 x 45	$^1/_2$" x 1$^3/_4$"	0.85
1$^1/_2$"	VEFL 506	79.38	112	36.50	94	30	17	M 16 x 50	$^5/_8$" x 2"	1.80
2"	VEFL 507	96.82	134	44.45	114	30	21	M 20 x 65	$^3/_4$" x 2$^1/_2$"	2.00
2$^1/_2$"	VEFL 508	123.80	180	58.80	150	45	26	M 24 x 75	-	5.30

VE-LOCK®

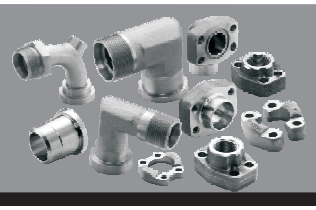

SAE-SOCKET WELD FLANGE 500 P.S.I.

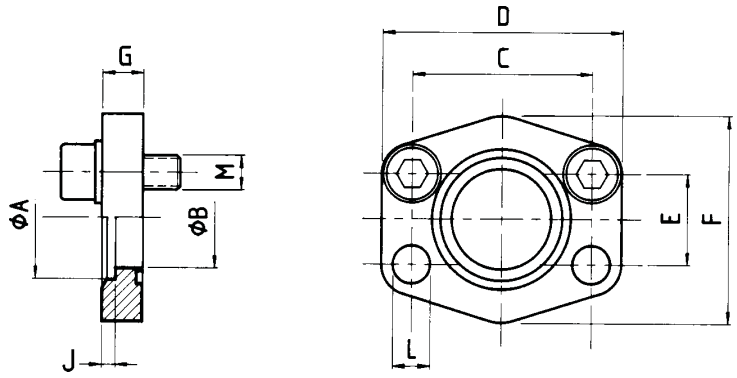

Material: 1 ST 44.3 (FE 430), ST 52.3 (FE 510).....Carbon Steel
2. 1.4404 316L.....Stainless Steel

Note: Maximum recommended working pressure 40 bar all sizes

3.000 Series														
Size	VE-LOCK® ITEM CODE	Tube	A	B	C	D	E	F	G	J	ØL	M (Screws)		Weight kg
												Metric	UNC	
1/2"	VEFL 509	22 x 2	22.5	15	38.10	56	17.48	46	10	3	9.0	M 8 x 25	-	0.12
3/4"	VEFL 510	28 x 2	28.5	20	47.63	65	22.23	50	12	4	11.0	M 10 x 30	-	0.20
1"	VEFL 511	35 x 2	35.5	29	52.37	70	26.19	55	12	4	11.0	M 10 x 30	-	0.25
1 1/4"	VEFL 512	42 x 2	42.5	34	58.72	79	30.18	68	12	4	11.5	M 10 x 30	-	0.31
1 1/2"	VEFL 513	48.3 x 3.25	49.0	42	69.85	93	35.71	78	15	4	13.5	M 12 x 35	-	0.50
2"	VEFL 514	60.3 x 3.65	61.0	53	77.77	102	42.88	90	15	4	13.5	M 12 x 35	-	0.59
2 1/2"	VEFL 515	76.1 x 3.65	77.0	64	88.90	114	50.80	105	15	4	13.5	M 12 x 35	-	0.72
3"	VEFL 516	88.9 x 4.05	90.0	80	106.38	134	61.93	124	20	5	17.5	M 16 x 40	-	1.25
3 1/2"	VEFL 517	101.6 x 4.50	103.0	93	120.65	152	69.85	136	20	5	17.5	M 16 x 40	-	1.50
4"	VEFL 518	114.3 x 4.50	116.0	105	130.18	162	77.77	146	25	6	17.5	M 16 x 45	-	2.15
5"	VEFL 519	139.7 X 4.85	141.0	126	152.40	190	92.08	170	28	8	17.5	M 16 x 45	-	3.00

VE-LOCK®

SAE-CLOSED FLANGE COMPANION

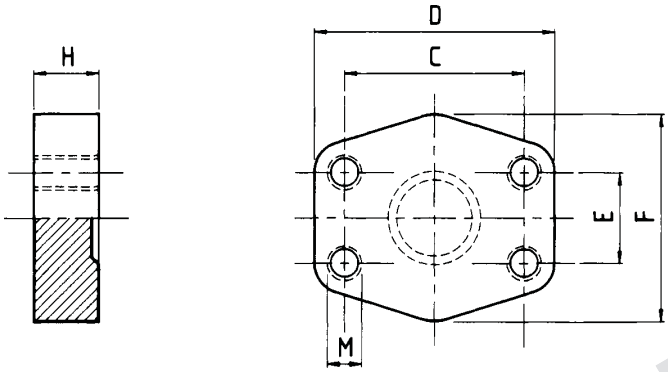

Material: 1 ST 44.3 (FE 430) ST 52.3 (FE 510).....Carbon Steel
2. 1.4404 316L.....Stainless Steel

Size	VE-LOCK® ITEM CODE	C	D	E	F	H	M	Weight kg
3.000 Series								
1/2"	VEFL 520	38.10	56	17.48	48	16	M 8	0.20
3/4"	VEFL 521	47.63	65	22.23	50	16	M 10	0.30
1"	VEFL 522	52.37	70	26.19	60	19	M 10	0.37
1 1/4"	VEFL 523	58.72	79	30.18	68	18	M 10	0.54
1 1/2"	VEFL 524	69.85	93	35.71	78	20	M 12	0.90
2"	VEFL 525	77.77	102	42.88	90	20	M 12	1.00
2 1/2"	VEFL 526	88.90	114	50.80	105	20	M 12	1.35
3"	VEFL 527	106.38	134	61.93	124	24	M 16	2.35
3 1/2"	VEFL 528	120.65	152	69.85	136	22	M 16	2.90
4"	VEFL 529	130.18	162	77.77	146	25	M 16	3.90
5"	VEFL 530	152.40	190	92.08	170	28	M 16	4.00
6.000 Series								
1/2"	VEFL 531	40.49	56	18.24	48	16	M 8	0.20
3/4"	VEFL 532	50.80	71	23.80	60	19	M 10	0.48
1"	VEFL 533	57.15	81	27.76	70	24	M 12	0.77
1 1/4"	VEFL 534	66.68	95	31.75	78	27	M 14	0.85
1 1/2"	VEFL 535	79.38	112	36.50	94	30	M 16	1.80
2"	VEFL 536	96.82	134	44.45	114	28	M 20	2.00
2 1/2"	VEFL 537	123.80	180	58.80	150	45	M 24	5.30

VE-LOCK®

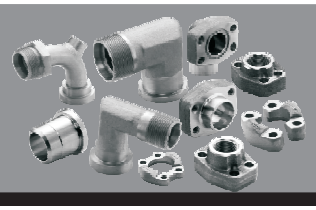

SAE - SOCKET WELD COMPANION FLANGE 500 P.S.I

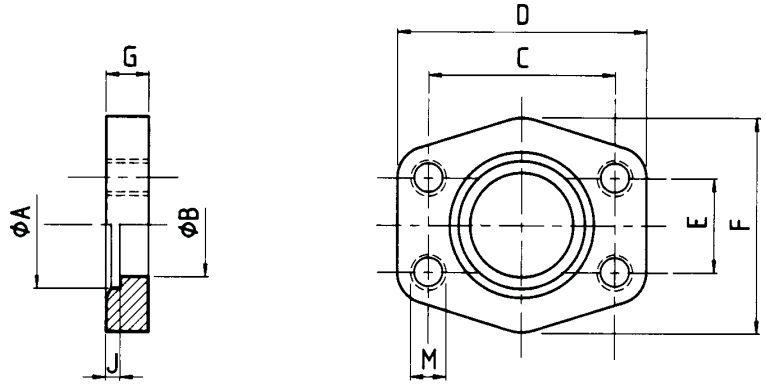

Material: 1 ST 44.3 (FE 430), ST 52.3 (FE 510).....Carbon Steel
2. 1.4404 316L.....Stainless Steel

Note: Maximum recommended working pressure 40 bar all sizes

3.000 Series												
Size	VE-LOCK® ITEM CODE	Tube	A	B	C	D	E	F	G	J	M	Weight kg
1/2"	VEFL 538	22 x 2	22.5	15	38.10	56	17.48	46	10	3	M 8	0.12
3/4"	VEFL 539	28 x 2	28.5	20	47.63	65	22.23	50	12	4	M 10	0.20
1"	VEFL 540	35 x 2	35.5	29	52.37	70	26.19	55	12	4	M 10	0.25
1 1/4"	VEFL 541	42 x 2	42.5	34	58.72	79	30.18	68	12	4	M 10	0.31
1 1/2"	VEFL 542	48.3 x 3.25	49.0	42	69.85	93	35.71	78	15	4	M 12	0.50
2"	VEFL 543	60.3 x 3.65	61.0	53	77.77	102	42.88	90	15	4	M 12	0.59
2 1/2"	VEFL 544	76.1 x 3.65	77.0	64	88.90	114	50.80	105	15	4	M 12	0.72
3"	VEFL 545	88.9 x 4.05	90.0	80	106.38	134	61.93	124	20	5	M 16	1.25
3 1/2"	VEFL 546	101.6 x 4.5	103.0	93	120.65	152	69.85	136	20	5	M 16	1.50
4"	VEFL 547	114.3 x 4.5	116.0	105	130.18	162	77.77	146	25	6	M 16	2.15
5"	VEFL 548	139.7 X 4.85	141.0	126	152.40	190	92.08	170	28	8	M 16	3.00

VE-LOCK®

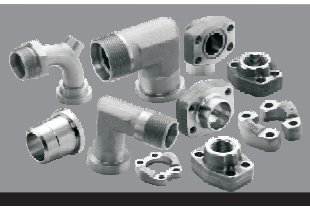

SAE - SOCKET WELD FLANGE 500 P.S.I.

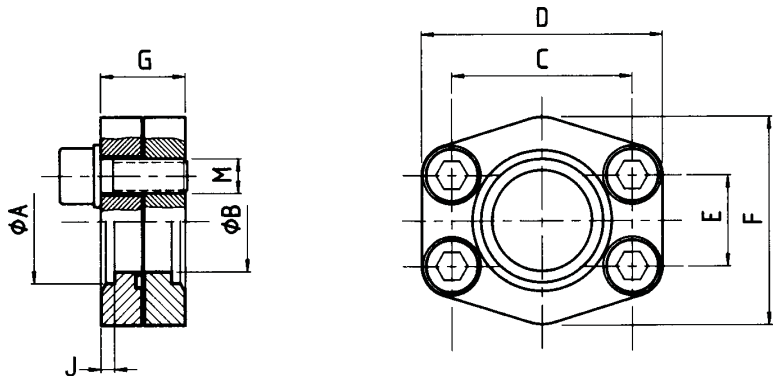

Material: 1 ST 44.3 (FE 430), ST 52.3 (FE 510).....Carbon Steel
2. 1.4404 316L.....Stainless Steel

Note: Maximum recommended working pressure 40 bar all sizes

3.000 Series												
Size	VE-LOCK® ITEM CODE	Tube	A	B	C	D	E	F	G	J	M	Weight kg
1/2"	VEFL 549	22 x 2	22.5	15	38.10	56	17.48	46	20	3	M 8 x 25	0.24
3/4"	VEFL 550	28 x 2	28.5	20	47.63	65	22.23	50	24	4	M 10 x 30	0.40
1"	VEFL 551	35 x 2	35.5	29	52.37	70	26.19	55	24	4	M 10 x 30	0.50
1 1/4"	VEFL 552	42 x 2	42.5	34	58.72	79	30.18	68	24	4	M 10 x 30	0.62
1 1/2"	VEFL 553	48.3 x 3.25	49.0	42	69.85	93	35.71	78	30	4	M 12 x 35	1.00
2"	VEFL 554	60.3 x 3.65	61.0	53	77.77	102	42.88	90	30	4	M 12 x 35	1.18
2 1/2"	VEFL 555	76.1 x 3.65	77.0	64	88.90	114	50.80	105	30	4	M 12 x 35	1.44
3"	VEFL 556	88.9 x 4.05	90.0	80	106.38	134	61.93	124	40	5	M 16 x 40	2.50
3 1/2"	VEFL 557	101.6 x 4.5	103.0	93	120.65	152	69.85	136	40	5	M 16 x 40	3.00
4"	VEFL 558	114.3 x 4.5	116.0	105	130.18	162	77.77	146	50	6	M 16 x 45	4.30
5"	VEFL 559	139.7 X 4.85	141.0	126	152.40	190	92.08	170	56	8	M 16 x 45	6.00

VE-LOCK®

SAE - JIC THREADED FLANGE

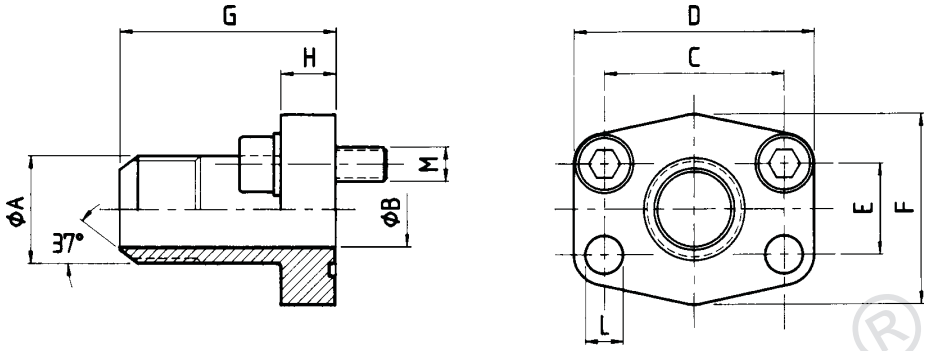

Material: ST 44.3 (FE 430).....Carbon Steel

3.000 Series													
Size	VE-LOCK® ITEM CODE	A	B	C	D	E	F	G	H	L	M (Screws)		Weight kg
											Metric	UNC	
1/2"	VEFL 560	3/4" -16 JIC	9.9	38.10	54	17.48	46	52	13	9.0	M 8 x 30	5/16"x 1 1/4"	0.25
1/2"	VEFL 561	7/8" -14 JIC	12.3	38.10	54	17.48	46	52	13	9.0	M 8 x 30	3/8" x 1 1/4"	0.30
3/4"	VEFL 562	1 1/16" -12 JIC	15.5	47.63	65	22.23	50	60	14	11.5	M 10 x 30	3/8"x 1 1/4"	0.35
1"	VEFL 563	1 5/16" -12 JIC	21.5	52.37	70	26.19	55	63	16	11.5	M 10 x 30	3/8"x 1 1/4"	0.50
1 1/4"	VEFL 564	1 5/8" -12 JIC	27.5	58.72	79	30.18	68	65	14	11.5	M 10 x 30	7/16"x 1 1/2"	0.70
1 1/4"	VEFL 565	1 5/16" -12 JIC	21.5	58.72	79	30.18	68	65	14	11.5	M 10 x 30	7/16"x 1 1/2"	0.70
1 1/2"	VEFL 566	1 7/8" -12 JIC	33.0	69.85	94	35.71	78	70	16	13.5	M 12 x 35	1/2"x 1 1/2"	1.00
6.000 Series													
1/2"	VEFL 567	3/4" -16 JIC	9.9	40.49	56	18.24	48	60	16	9.0	M 8 x 30	5/16"x 1 1/4"	0.30
1/2"	VEFL 568	7/8" -14 JIC	12.3	40.49	56	18.24	48	60	16	9.0	M 8 x 30	5/16"x 1 1/4"	0.40
3/4"	VEFL 569	1 1/16" -12 JIC	15.5	50.80	71	23.80	60	73	19	11.5	M 10 x 35	3/8"x 1 1/2"	0.70
1"	VEFL 570	1 5/16" -12 JIC	21.5	57.15	81	27.76	70	82	24	13.0	M 12 x 45	7/16"x 1 3/4"	1.00
1 1/4"	VEFL 571	1 5/8" -12 JIC	27.5	66.68	95	31.75	78	92	27	15.0*	M 14 x 50	1/2" x 1 3/4"	1.50
1 1/4"	VEFL 572	1 5/16" -12 JIC	21.5	66.68	95	31.75	78	92	27	15.0*	M 14 x 50	1/2"x 1 3/4"	1.50
1 1/2"	VEFL 573	1 7/8" -12 JIC	33.0	79.38	113	36.50	95	96	30	17.5	M 16 x 50	5/8"x 2"	2.30

VE-LOCK®

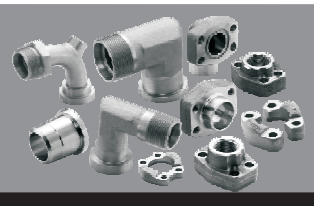

SAE-METRIC THREADED FLANGE DIN 3901/3902

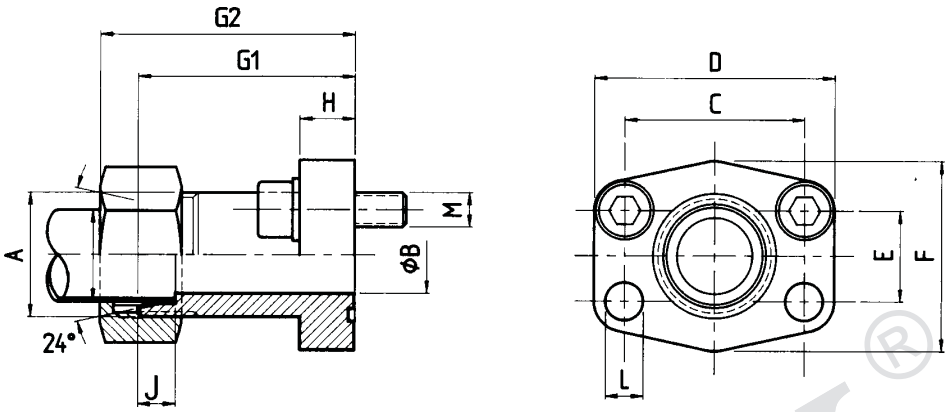

Material: 1 ST 44.3 (FE 430).....Carbon Steel

Size	VE-LOCK® ITEM CODE	A	B	C	D	E	F	G_1	G_2	H	J	ØL	M (Screws) Metric	M (Screws) UNC	Weight kg
3.000 Series															
$^1/_2$"	VEFL 574	M 22 x 1.5	12	38.10	54	17.48	46	52	60	13	7.0	9.0	M 8 x 30	$^5/_{16}$" x 1$^1/_4$"	0.25
$^3/_4$"	VEFL 575	M 30 x 2.0	19	47.63	65	22.23	50	60	69	14	7.5	11.5	M 10 x 30	$^3/_8$" x 1$^1/_4$"	0.35
$^3/_4$"	VEFL 576	M 30 x 2.0	16	47.63	65	22.23	50	60	73	14	10.5	11.5	M 10 x 30	$^3/_8$" x 1$^1/_4$"	0.36
1"	VEFL 577	M 30 x 2.0	19	52.37	70	26.19	55	63	72	16	7.5	11.5	M 10 x 30	$^3/_8$" x 1$^1/_4$"	0.44
1"	VEFL 578	M 36 x 2.0	24	52.37	70	26.19	55	63	72	16	7.5	11.5	M 10 x 30	$^3/_8$" x 1$^1/_4$"	0.50
1"	VEFL 579	M 30 x 2.0	16	52.37	70	26.19	55	63	76	16	10.5	11.5	M 10 x 30	$^3/_8$" x 1$^1/_4$"	0.46
1"	VEFL 580	M 36 x 2.0	20	52.37	70	26.19	55	63	75	16	12.0	11.5	M 10 x 30	$^3/_8$" x 1$^1/_4$"	0.52
1$^1/_4$"	VEFL 581	M 36 x 2.0	24	58.72	79	30.18	68	65	74	14	7.5	11.5	M 10 x 35	$^7/_{16}$" x 1$^1/_2$"	0.68
1$^1/_4$"	VEFL 582	M 45 x 2.0	29	58.72	79	30.18	68	65	76	14	10.5	11.5	M 10 x 35	$^7/_{16}$" x 1$^1/_2$"	0.72
1$^1/_4$"	VEFL 583	M 42 x 2.0	25	58.72	79	30.18	68	65	78	14	13.5	11.5	M 10 x 35	$^7/_{16}$" x 1$^1/_2$"	0.70
1$^1/_2$"	VEFL 584	M 52 x 2.0	36	69.85	94	35.71	78	70	82	16	11.0	13.5	M 12 x 35	$^1/_2$" x 1$^1/_2$"	1.00
1$^1/_2$"	VEFL 585	M 52 x 2.0	32	69.85	94	35.71	78	70	85	16	16.0	13.5	M 12 x 35	$^1/_2$" x 1$^1/_2$"	1.02
6.000 Series															
$^1/_2$"	VEFL 586	M 24 x 1.5	12	40.49	56	18.24	48	60	70	16	8.5	9.0	M 8 x 30	$^5/_{16}$" x 1$^1/_4$"	0.30
$^3/_4$"	VEFL 587	M 36 x 2.0	19	50.80	71	23.80	60	73	85	19	12.0	11.5	M 10 x 35	$^3/_8$" x 1$^1/_2$"	0.68
1"	VEFL 588	M 42 x 2.0	25	57.15	81	27.76	70	82	95	24	13.5	13.0	M 12 x 45	$^7/_{16}$" x 1$^3/_4$"	1.00
1$^1/_4$"	VEFL 589	M 52 x 2.0	29	66.68	95	31.75	78	92	107	27	16.0	15.0*	M 14 x 50	$^1/_2$" x 1$^3/_4$"	1.60
1$^1/_4$"	VEFL 590	M 42 x 2.0	25	66.68	95	31.75	78	92	106	27	13.5	15.0*	M 14 x 50	$^1/_2$" x 1$^3/_4$"	1.54
1$^1/_2$"	VEFL 591	M 52 x 2.0	32	79.38	113	36.50	95	96	111	30	16.0	17.5	M 16 x 50	$^5/_8$" x 2"	2.20

VE-LOCK®

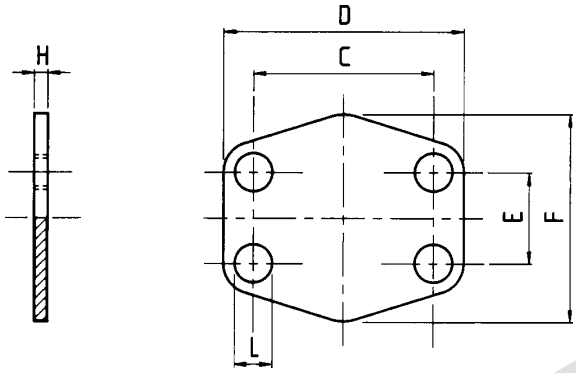

Material: ST 35

Size	VE-LOCK® ITEM CODE	C	D	E	F	H	ØL	Weight kg
3.000 Series								
1/2"	VEFL 592	38.10	54	17.48	45.60	3	9	0.01
3/4"	VEFL 593	47.63	65	22.23	51.80	3	11	0.01
1"	VEFL 594	52.37	70	26.19	58.40	3	11	0.01
1 1/4"	VEFL 595	58.72	79	30.18	72.60	3	11	0.02
1 1/2"	VEFL 596	69.85	94	35.71	82.20	3	13	0.02
2"	VEFL 597	77.77	102	42.88	90.00	3	13	0.03
2 1/2"	VEFL 598	88.90	114	50.80	108.12	3	13	0.03
3"	VEFL 599	106.38	135	61.93	130.60	4	17	0.04
3 1/2"	VEFL 600	120.65	152	69.85	139.00	4	17	0.06
4"	VEFL 601	130.18	162	77.77	152.00	4	17	0.08
5"	VEFL 602	152.40	184	92.08	180.00	4	17	0.09
6.000 Series								
1/2"	VEFL 603	40.49	56	18.24	47.2	4	9	0.01
3/4"	VEFL 604	50.80	71	23.80	60.0	4	11	0.01
1"	VEFL 605	57.15	81	27.76	69.6	4	13	0.02
1 1/4"	VEFL 606	66.68	95	31.75	77.2	4	15	0.03
1 1/2"	VEFL 607	79.38	113	36.50	95.0	4	17	0.04
2"	VEFL 608	96.82	133	44.45	113.8	4	21	0.05

VE-LOCK®

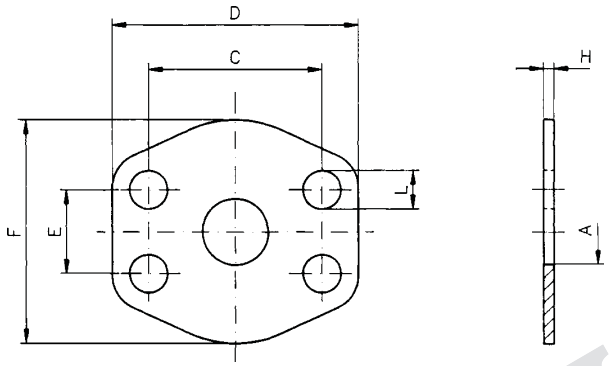

Material: ST 35

Size	VE-LOCK® ITEM CODE	ØA	C	D	E	F	H	ØL	Weight kg
3.000 Series									
1/2"	VEFL 609	13	38.10	54	17.48	45.60	3	9	0.01
3/4"	VEFL 610	19	47.63	65	22.23	51.80	3	11	0.01
1"	VEFL 611	25	52.37	70	26.19	58.40	3	11	0.01
1 1/4"	VEFL 612	32	58.72	79	30.18	72.60	3	11	0.02
1 1/2"	VEFL 613	38	69.85	94	35.71	82.20	3	13	0.02
2"	VEFL 614	51	77.77	102	42.88	90.00	3	13	0.03
2 1/2"	VEFL 615	63	88.90	114	50.80	108.00	3	13	0.03
3"	VEFL 616	73	106.38	135	61.93	130.60	4	17	0.04
3 1/2"	VEFL 617	89	120.65	152	69.85	139.00	4	17	0.06
4"	VEFL 618	99	130.18	162	77.77	152.00	4	17	0.08
5"	VEFL 619	120	152.40	184	92.08	180.00	4	17	0.09
6.000 Series									
1/2"	VEFL 620	13	40.49	56	18.24	47.2	4	9	0.01
3/4"	VEFL 621	17	50.80	71	23.80	60.0	4	11	0.01
1"	VEFL 622	24	57.15	81	27.76	69.6	4	13	0.02
1 1/4"	VEFL 623	31	66.68	95	31.75	77.2	4	15	0.03
1 1/2"	VEFL 624	38	79.38	113	36.50	95.0	4	17	0.04
2"	VEFL 625	51	96.82	133	44.45	113.8	4	21	0.05

VE-LOCK®

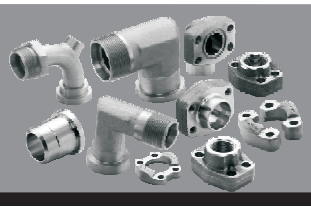

SAE-ADAPTOR FLANGE WITH TEST - POINT

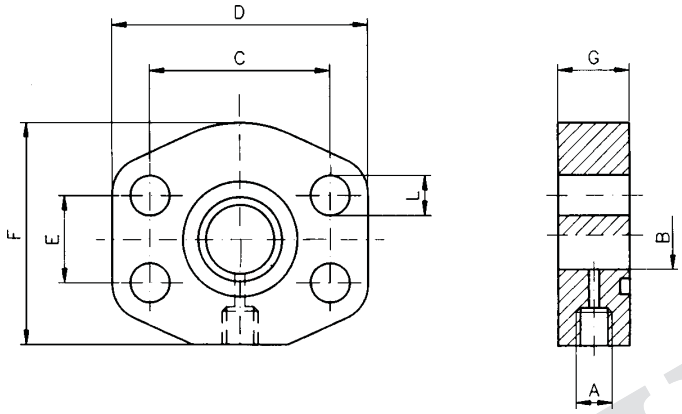

Material: 1. FE 510 (ST 52.3), FE 430 (ST 44.3).....Carbon Steel
2. 1.4404, 316L stainless.....Stainless Steel

Size	VE-LOCK® ITEM CODE	A	B	C	D	E	F	G	L	Weight kg
3.000 Series										
1/2"	VEFL 626	G1/4"	12	38.10	55	17.48	38	24	9.0	0.45
3/4"	VEFL 627	G1/4"	19	47.63	65	22.23	50	24	11.0	0.60
1"	VEFL 628	G1/4"	24	52.37	70	26.19	50	24	11.0	0.60
1 1/4"	VEFL 629	G1/4"	32	58.72	81	30.18	70	23	12.5	0.75
1 1/2"	VEFL 630	G1/4"	38	69.85	95	35.71	78	24	13.5	0.80
2"	VEFL 631	G1/4"	50	77.77	102	42.88	90	24	13.5	1.25
6.000 Series										
1/2"	VEFL 632	G1/4"	12	40.49	55	18.24	38	24	9.0	0.45
3/4"	VEFL 633	G1/4"	19	50.80	70	23.80	50	24	11.0	0.60
1"	VEFL 634	G1/4"	24	57.15	81	27.76	70	23	13.0	0.75
1 1/4"	VEFL 635	G1/4"	32	66.68	95	31.75	78	24	15.0	0.80
1 1/2"	VEFL 636	G1/4"	38	79.38	112	36.50	94	24	17.0	1.40
2"	VEFL 637	G1/4"	51	96.82	134	44.45	114	24	21.0	1.57

VE-LOCK®

SAE-FLANGE PLUG

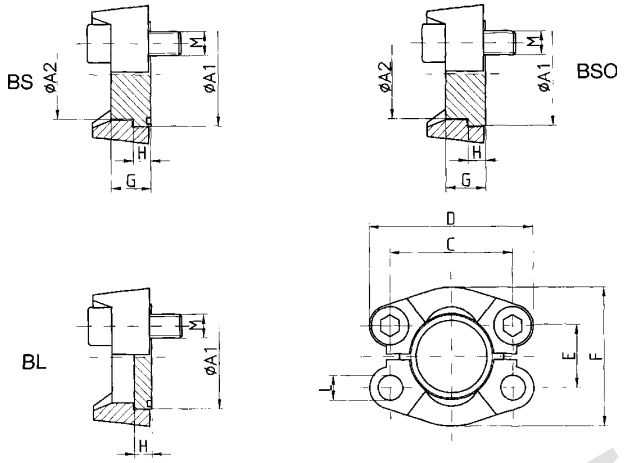

Material: ST 44.3/52.3 **finish:** zinc plated yellow chromated

Size	Max.Working Pressure kg/cm² BL	Max.Working Pressure kg/cm² BS	VE-LOCK® ITEM CODE	A_1	A_2	C	D	E	F	G	H	L	M (Screws) metric	M (Screws) unc	Weight (plug only) kg.
3.000 Series															
1/2"	210	345	VEFL 638	30.2	23.9	38.10	54	17.48	45.6	16	6.9	8.50	M 8 x 30	5/16" x 1 1/4"	0.03
3/4"	210	345	VEFL 639	38.1	31.7	47.63	65	22.23	51.8	17	6.9	10.50	M 10 x 30	3/8 x 1 1/4"	0.05
1"	210	345	VEFL 640	44.4	38.1	52.37	70	26.19	58.4	17	8.1	10.50	M 10 x 35	3/8" x 1 1/4"	0.08
1 1/4"	210	276	VEFL 641	50.8	42.3	58.72	79	30.18	72.6	17	8.1	10.5	M 10 x 30	-	0.11
												12.5	M 12 x 40	-	
												12.0	-	7/16" x 1 1/2"	
1 1/2"	160	207	VEFL 642	60.3	50.3	69.85	94	35.71	82.2	19	8.1	13.50	M 12 x 35	1/2" x 1 1/2"	0.16
2"	160	207	VEFL 643	71.4	62.2	77.77	102	42.88	96.4	19	9.7	13.50	M 12 x 35	1/2" x 1 1/2"	0.27
2 1/2"	-	172	VEFL 644	84.1	74.0	88.90	114	50.80	108.0	40	9.5	13.50	M 12 x 35	1/2" x 1 1/2"	0.90
3"	-	138	VEFL 645	101.6	90.0	106.38	135	61.93	130.6	45	9.5	16.75	M 16 x 50	5/8" x 2"	1.30
3 1/2"	-	34	VEFL 646	114.3	102.0	120.65	152	69.85	139.0	30	11.2	17.00	M 16 x 50	5/8" x 2"	1.80
4"	-	34	VEFL 647	127.0	114.0	130.18	162	77.77	152.0	36	11.2	17.00	M 16 x 50	5/8" x 2"	2.11
5"	-	34	VEFL 648	152.4	140.0	152.40	184	92.08	180.0	45	11.2	17.00	M 16 x 50	5/8" x 2"	2.70
6.000 Series															
1/2"	250	420	VEFL 649	31.7	23.9	40.39	56	18.24	47.2	18	7.9	8.50	M 8 x 30	5/16" x 1 1/4"	0.04
3/4"	250	420	VEFL 650	41.3	31.7	50.80	71	23.80	60.0	15	8.9	10.50	M 10 x 35	3/8" x 1 1/2"	0.08
1"	250	420	VEFL 651	47.6	38.1	57.15	81	27.76	69.6	16	9.7	12.5	M 12 x 45	-	0.12
												12.0	-	7/16" x 1 3/4"	
1 1/4"	250	420	VEFL 652	54.0	43.7	66.68	95	31.75	77.2	16	10.4	14.5	M 14 x 50	-	0.17
												14.0	-	1/2" x 1 3/4"	
1 1/2"	250	420	VEFL 653	63.5	50.8	79.38	113	36.50	95.0	19	12.7	16.75	M 16 x 55	5/8" x 2"	0.30
2"	250	420	VEFL 654	79.4	66.5	96.82	133	44.45	113.8	30	12.7	21.00	M 20 x 65	3/4" x 2 1/2"	0.47
2 1/2"	-	420	VEFL 655	108.0	90.0	123.80	180	58.80	150.2	45	21.2	26.00	M 24 x 75	-	2.60
3"	-	420	VEFL 656	132.0	114.0	152.40	215	71.60	198.16	55	26.5	31.00	M 30 x 90	-	5.00

VE-LOCK®

SAE-FLANGE HEAD

BS-

BO

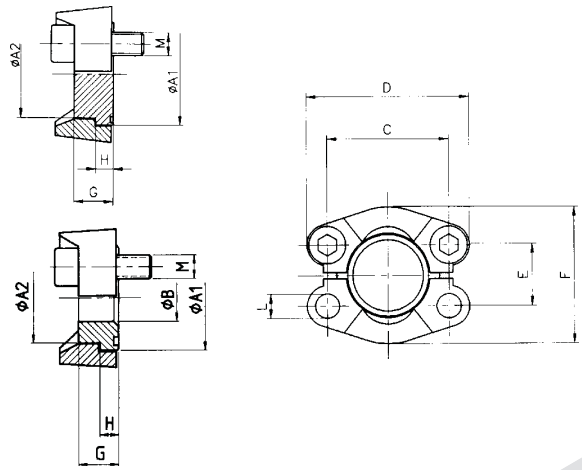

Material: ST 52.3 (FE 510).....Carbon Steel

Size	VE-LOCK® ITEM CODE	$ØA_1$	$ØA_2$	ØB min/ max	C	D	E	F	G	H	ØL	M (Screws) Metric	M (Screws) UNC	Weight (plug only) kg
3.000 Series														
$^1/_2$"	VEFL 657	30.2	23.9	0/10	38.10	54	17.48	45.6	16	6.9	8.5	M 8 x 30	$^5/_{16}$" x 1$^1/_4$"	0.05
$^3/_4$"	VEFL 658	38.1	31.7	0/15	47.63	65	22.23	51.8	17	6.9	10.5	M 10 x 30	$^3/_8$" x 1$^1/_4$"	0.08
1"	VEFL 659	44.4	38.1	0/20	52.37	70	26.19	58.4	17	8.1	10.5	M 10 x 35	$^3/_8$" x 1$^1/_2$"	0.12
1$^1/_4$"	VEFL 660	50.8	42.3	0/27	58.72	79	30.18	72.6	17	8.1	10.5	M 10 x 30	-	0.13
											12.5	M 12 x 40	-	
											12.0	-	$^7/_{16}$" x 1$^1/_2$"	
1$^1/_2$"	VEFL 661	60.3	50.3	0/32	69.85	94	35.71	82.2	19	8.1	13.5	M 12 x 35	$^1/_2$" x 1$^1/_2$"	0.20
2"	VEFL 662	71.4	62.2	0/40	77.77	102	42.88	96.4	19	9.7	13.5	M 12 x 35	$^1/_2$" x 1$^1/_2$"	0.31
2$^1/_2$"	VEFL 663	84.1	74.0	0/50	88.90	114	50.80	108.2	30	9.7	13.5	M 12 x 40	$^1/_2$" x 1$^3/_4$"	0.47
6.000 Series														
$^1/_2$"	VEFL 664	31.7	23.9	0/10	40.39	56	18.24	47.2	16	7.9	8.50	M 8 x 30	$^5/_{16}$" x 1$^1/_4$"	0.06
$^3/_4$"	VEFL 665	41.3	31.7	0/15	50.80	71	23.80	60.0	20	8.9	10.50	M 10 x 35	$^3/_8$" x 1$^1/_2$"	0.12
1"	VEFL 666	47.6	38.1	0/20	57.15	81	27.76	69.6	22	9.7	12.5	M 12 x 45	-	0.17
											12.0	-	$^7/_{16}$" x 1$^3/_4$"	
1$^1/_4$"	VEFL 667	54.0	43.7	0/27	66.68	95	31.75	77.2	27	10.4	14.5	M 14 x 50	-	0.22
											14.0	-	$^1/_2$" x 1$^3/_4$"	
1$^1/_2$"	VEFL 668	63.5	50.8	0/32	79.38	113	36.50	95.0	32	12.7	16.75	M 16 x 55	$^5/_8$" x 2"	0.39
2"	VEFL 669	79.4	66.5	0/40	96.82	133	44.45	113.8	40	127	21.00	M 20 x 65	$^3/_4$" x 2$^1/_2$"	0.79

VE-LOCK®

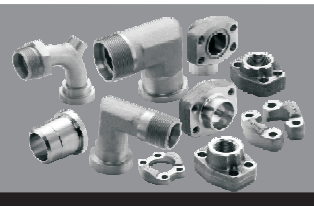

VE-LOCK

SAE-SOCKET WELD COUPLING FLANGE

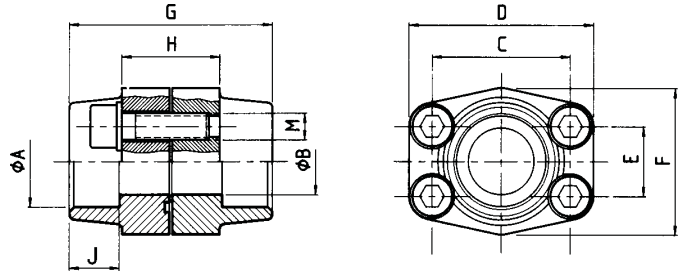

Material: 1 ST 52.3.....Carbon Steel
2. 1.4404 316L.....Stainless Steel

Size	VE-LOCK® ITEM CODE	ØA	ØB	C	D	E	F	G	H	J	M (Screws) Metric	M (Screws) UNC	Weight kg without screws
3.000 Series													
1/2"	VEFL 670	21.6	13	38.10	54	17.48	46	72	32	19	M 8 x 30	5/16" x 1 1/4"	0.50
1/2"	VEFL 671	17.5	13	38.10	54	17.48	46	72	32	19	M 8 x 30	5/16" x 1 1/4"	0.56
1/2"	VEFL 672	20.3	13	38.10	54	17.48	46	72	32	19	M 8 x 30	5/16" x 1 1/4"	0.56
3/4"	VEFL 673	27.2	19	47.63	65	22.23	50	72	36	19	M 10 x 35	3/8" x 1 1/2"	0.78
3/4"	VEFL 674	25.3	19	47.63	65	22.23	50	72	36	19	M 10 x 35	3/8" x 1 1/2"	0.78
1"	VEFL 675	34.0	25	52.37	70	26.19	55	76	36	19	M 10 x 35	3/8" x 1 1/2"	0.92
1"	VEFL 676	30.3	25	52.37	70	26.19	55	76	36	19	M 10 x 35	3/8" x 1 1/2"	0.92
1 1/4"	VEFL 677	42.8	32	58.72	79	30.18	68	82	42	22	M 10 x 40	7/16" x 1 1/2"	1.32
1 1/4"	VEFL 678	38.3	32	58.72	79	30.18	68	82	42	22	M 10 x 40	7/16" x 1 1/2"	1.32
1 1/2"	VEFL 679	48.6	38	69.85	93	35.71	78	90	50	24	M 12 x 45	1/2" x 1 3/4"	2.10
1 1/2"	VEFL 680	50.5	38	69.85	93	35.71	78	90	50	24	M 12 x 45	1/2" x 1 3/4"	2.10
2"	VEFL 681	61.0	51	77.77	102	42.88	90	90	50	26	M 12 x 45	1/2" x 1 3/4"	2.38
2 1/2"	VEFL 682	76.6	63	88.90	114	50.80	105	100	50	30	M 12 x 45	1/2" x 1 3/4"	2.80
3"	VEFL 683	90.5	73	106.38	134	61.93	124	100	54	34	M 16 x 50	5/8" x 2"	4.30
3 1/2"	VEFL 684	103.0	89	120.65	152	69.85	136	96	54	34	M 16 x 50	5/8" x 2"	4.80
4"	VEFL 685	115.5	99	130.18	162	77.77	146	96	54	34	M 16 x 50	5/8" x 2"	5.70
6.000 Series													
1/2"	VEFL 686	21.6	13	40.49	54	18.24	46	72	32	19	M 8 x 30	5/16" x 1 1/4"	0.52
1/2"	VEFL 687	17.5	13	40.49	54	18.24	46	72	32	19	M 8 x 30	5/16" x 1 1/4"	0.58
1/2"	VEFL 688	20.3	13	40.49	54	18.24	46	72	32	19	M 8 x 30	5/16" x 1 1/4"	0.58
3/4"	VEFL 689	27.2	19	50.80	71	23.80	55	70	42	22	M 10 x 35	3/8" x 1 1/2"	1.00
3/4"	VEFL 690	25.3	19	50.80	71	23.80	55	70	42	22	M 10 x 35	3/8" x 1 1/2"	1.00
1"	VEFL 691	34.0	25	57.15	81	27.76	65	84	50	22	M 12 x 45	7/16" x 1 3/4"	1.52
1"	VEFL 692	30.3	25	57.15	81	27.76	65	84	50	22	M 12 x 45	7/16" x 1 3/4"	1.52
1 1/4"	VEFL 693	42.8	32	66.68	95	31.75	78	90	54	25	M 14 x 45	1/2" x 1 3/4"	2.40
1 1/4"	VEFL 694	38.3	32	66.68	95	31.75	78	90	54	25	M 14 x 45	1/2" x 1 3/4"	2.40
1 1/2"	VEFL 695	48.6	38	79.38	112	36.50	94	100	60	28	M 16 x 50	5/8" x 2"	3.30
1 1/2"	VEFL 696	50.5	38	79.38	112	36.50	94	100	60	28	M 16 x 50	5/8" x 2"	3.30
2"	VEFL 697	61.0	51	96.82	134	44.45	114	130	74	24	M 20 x 65	5/8" x 2 1/2"	4.90

VE-LOCK ®

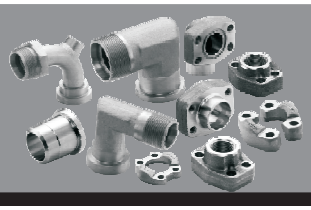

SAE-WELD ON COUPLING

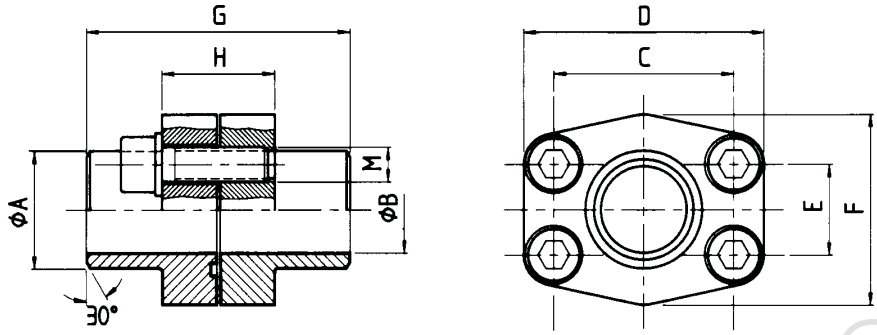

Material: 1 ST 52.3 (FE 530).....Carbon Steel
2. 1.4404 316L.....Stainless Steel

3.000 Series												
Size	VE-LOCK® ITEM CODE	ØA	ØB	C	D	E	F	G	H	M (Screws)		Weight kg
										Metric	UNC	
1/2"	VEFL 698	21.5	13	38.10	54	17.48	46	72	32	M 8 x 30	5/16" x 1 1/4"	0.56
1/2"	VEFL 699	17.5	13	38.10	54	17.48	46	72	32	M 8 x 30	5/16" x 1 1/4"	0.50
3/4"	VEFL 700	28.0	19	47.63	65	22.23	50	72	36	M 10 x 35	3/8" x 1 1/2"	0.78
1"	VEFL 701	34.0	25	52.37	70	26.19	55	76	36	M 10 x 35	3/8" x 1 1/2"	0.92
1 1/4"	VEFL 702	42.8	32	58.72	79	30.18	68	82	42	M 10 x 40	7/16" x 1 1/2"	1.32
1 1/2"	VEFL 703	48.6	38	69.85	93	35.71	78	88	50	M 12 x 45	1/2" x 1 3/4"	2.10
2"	VEFL 704	61.0	51	77.77	102	42.88	90	90	50	M 12 x 45	1/2" x 1 3/4"	2.38
2 1/2"	VEFL 705	77.0	63	88.90	114	50.80	105	100	50	M 12 x 45	1/2" x 1 3/4"	2.80
3"	VEFL 706	92.0	73	106.38	134	61.93	124	100	54	M 16 x 50	5/8" x 2"	4.30
3 1/2"	VEFL 707	103.0	89	120.65	152	69.85	136	96	54	M 16 x 50	5/8" x 2"	4.80
4"	VEFL 708	115.5	99	130.18	162	77.77	146	96	54	M 16 x 50	5/8" x 2"	5.70
5"	VEFL 709	140.2	120	152.40	184	92.08	180	100	56	M 16 x 55	5/8" x 2"	10.00
6.000 Series												
1/2"	VEFL 710	21.6	13	40.49	54	18.24	46	72	32	M 8 x 30	5/16" x 1 1/4"	0.58
1/2"	VEFL 711	17.5	13	40.49	54	18.24	46	72	32	M 8 x 30	5/16" x 1 1/4"	0.52
3/4"	VEFL 712	28.0	19	50.80	71	23.80	55	70	42	M 10 x 35	3/8" x 1 1/2"	1.00
1"	VEFL 713	34.0	25	57.15	79	27.76	65	82	42	M 12 x 45	7/16" x 1 3/4"	1.52
1 1/4"	VEFL 714	42.8	32	66.68	95	31.75	78	88	48	M 14 x 45	1/2" x 1 3/4"	2.40
1 1/4"	VEFL 715	42.8	29	66.68	95	31.75	78	88	48	M 14 x 45	1/2" x 1 3/4"	2.80
1 1/2"	VEFL 716	48.6	38	79.38	114	36.50	94	110	60	M 16 x 50	5/8" x 2"	3.30
1 1/2"	VEFL 717	48.6	38	79.38	114	36.50	94	110	60	M 16 x 50	5/8" x 2"	4.00
2"	VEFL 718	61.0	51	96.82	134	44.45	114	130	74	M 20 x 65	3/4" x 2 1/2"	4.90
2"	VEFL 719	61.0	43	96.82	134	44.45	114	130	74	M 20 x 65	3/4" x 2 1/2"	5.50
2 1/2"	VEFL 720	76.1	51	123.80	180	58.70	152	160	90	M 24 x 75	-	12.80
2 1/2"	VEFL 721	88.9	60.5	123.80	180	58.70	152	160	90	M 24 x 75	-	16.60

VE-LOCK®

BUTT WELD COUPLING LOOSE HEAD FLANGE

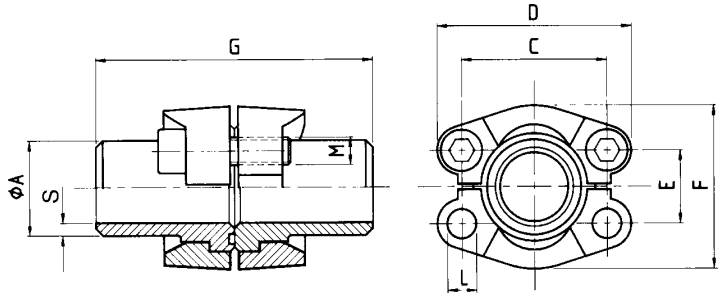

Material: 1 ST 52.3 (FE 510).....Carbon Steel

Note: Maximum recommended working pressure 40 bar all sizes

6.000 Series													
Size	Maximum Working Pressure kg/cm³	VE-LOCK® ITEM CODE	Tube Ø A	Tube Wall S	C	D	E	F	G	L	M (Screws) Metric	M (Screws) UNC	Weight kg
1/2"	414	VEFL 722	16.0 20.0 21.3	2.0 2.5 2.9	40.49	56	18.24	47.2	68	8.5	M 8 x 30	5/16" x 1 1/4"	0.60
3/4"	414	VEFL 723	16.0 20.0 25.0 25.0 25.0 26.9	2.0 2.5 3.0 3.5 4.0 5.6	50.80	71	23.80	60.0	76	10.5	M 10 x 35	3/8" x 1 1/4"	1.10
1"	414	VEFL 724	25.0 30.0 30.0 33.7 33.7 38.4 38.0	3.0 3.0 4.0 6.3 7.1 4.0 5.0	57.15	81	27.76	69.6	80	12.0	-	7/16" x 1 3/4"	1.70
										12.5	M 12 x 45	-	
1 1/4"	414	VEFL 725	25.0 30.0 38.0 38.0 42.4	3.0 4.0 5.0 5.5 6.3	66.68	95	31.75	77.2	90	13.5	-	1/2" x 1 3/4"	2.50
										14.5	M 14 x 50*	-	
1 1/2"	414	VEFL 726	38.0 45.0 48.3 48.3 48.3 48.3 48.3 50.0	5.0 6.5 5.0 6.3 7.1 8.0 8.8 6.0	79.38	113	36.50	95.0	100	16.75	M 16 x 55	5/8" x 2"	4.10
2"	414	VEFL 727	48.3 60.3 60.3 60.3 60.3 60.3 60.3	6.3 6.3 7.5 8.0 8.75 10.0 13.4	96.82	133	44.45	113.8	116	21.0	M 20 x 65	3/4" x 2 1/2"	6.70
2 1/2"	414	VEFL 728	76.1 76.1 88.9 88.9 88.9	8.0 10.0 10.0 11.0 14.2	123.80	180	58.80	150.2	150	26.0	M 24 x 75	-	15.0
3"	414	VEFL 729	88.9 88.9 88.9 114.3 114.3	10.0 11.0 14.2 11.0 17.5	152.40	215	71.60	198.2	160	31	M 30 x 90	-	27.0

VE-LOCK ®

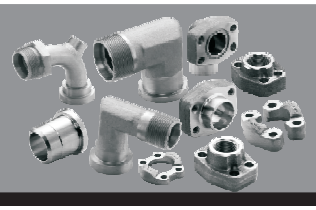

BUTT WELD COUPLING LOOSE HEAD FLANGE

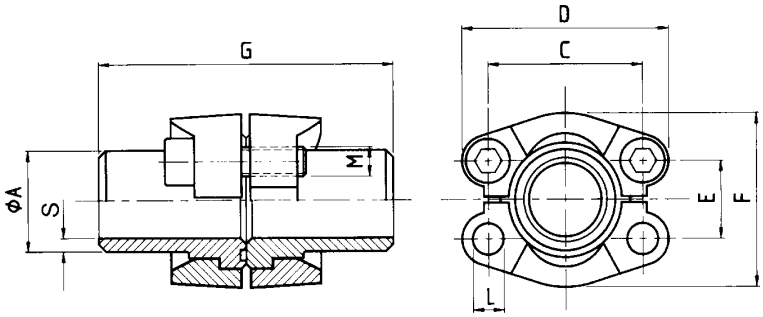

Material: 1 ST 52.3 (FE 510).....Carbon Steel

Note: Maximum recommended working pressure 40 bar all sizes

3.000 Series														
Size	Maximum Working Pressure kg/cm³	VE-LOCK® ITEM CODE	Tube Ø A	Tube Wall S	C	D	E	F	G	L	M (Screws) Metric	M (Screws) UNC	Weight kg
$^1/_2$"	345	VEFL 730	16.0 20.0 21.3 21.3 21.3	2.0 2.5 2.9 3.8 4.7	38.10	54	17.48	45.6	82	8.5	M 8 x 30	$^5/_{16}$" x 1$^1/_4$"	0.50
$^3/_4$"	345	VEFL 731	25.0 26.9 26.9	3.0 3.6 3.9	47.63	65	22.23	51.8	100	10.5	M 10 x 30	$^3/_8$" x 1$^1/_4$"	0.80
1"	345	VEFL 732	25.0 30.0 30.0 33.7 38.0 38.0	3.0 3.0 4.0 4.5 4.0 5.0	52.37	70	26.19	58.4	100	10.5	M 10 x 35	$^3/_8$" x 1$^1/_4$"	1.10
1$^1/_4$"	276	VEFL 733	25.0 30.0 38.0 38.0 38.0 42.4 42.4 42.4	3.0 3.0 3.0 4.0 5.0 3.6 4.5 6.3	58.72	79	30.18	72.6	110	12 11 13.5	- M 10 x 30 M 12 x 40	$^7/_{16}$" x 1$^1/_2$" - -	1.50
1$^1/_2$"	207	VEFL 734	38.0 42.0 42.0 45.0 48.3 48.3 48.3 48.3 48.3 50.0	4.0 3.0 5.0 5.0 2.6 3.6 5.0 6.3 7.1 6.0	69.85	94	35.71	82.2	114	13.5	M 12 x 35	$^1/_2$" x 1$^1/_2$"	2.20
2"	207	VEFL 735	48.3 55.0 60.3 60.3 60.3 60.3 60.3	5.0 5.0 2.9 3.9 5.0 6.3 8.0	77.77	102	42.88	96.4	114	13.5	M 12 x 35	$^1/_2$" x 1$^1/_2$"	2.40
2$^1/_2$"	172	VEFL 736	65.0 70.0 76.1 76.1	6.0 7.5 5.5 7.1	88.90	114	50.80	108.20	116	13.5	M 12 x 40	$^1/_2$" x 1$^3/_4$"	3.50

VE-LOCK®

BUTT WELD COUPLING
LOOSE HEAD FLANGE

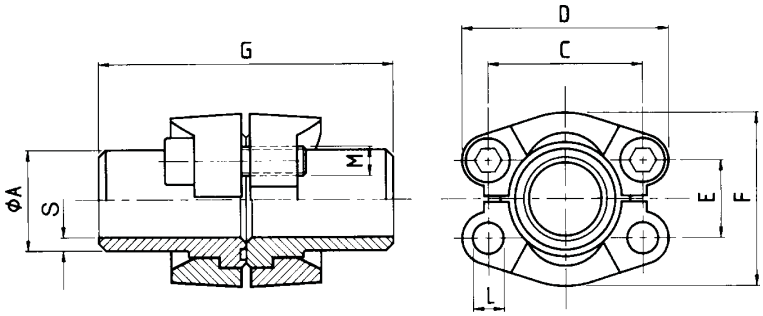

Material: 1 ST 52.3 (FE 510).....Carbon Steel

Note: Maximum recommended working pressure 40 bar all sizes

3.000 Series													
Size	Maximum Working Pressure kg/cm³	VE-LOCK® ITEM CODE	Tube		C	D	E	F	G	ØL	M (Screws)		Weight kg
			Ø	Wall							Metric	UNC	
			A	S									
3"	138	VEFL 737	8.0 88.9 88.9 88.9 88.9	6.0 3.2 3.6 7.0 8.0	106.38	135	61.93	130.6	120	16.75	M 16 x 45	$^5/_8$" x 2"	5.30
3$^1/_2$"	34	VEFL 738	100.0 88.9 88.9	6.0 3.6 8.0	120.65	152	69.85	139.0	120	17.00	M 16 x 45	$^5/_8$" x 2"	5.30
4"	34	VEFL 739	110.0 114.3 114.3 114.3	6.0 3.6 6.02 8.8	130.18	162	77.77	152.0	120	17.00	M 16 x 50	$^5/_8$" x 2"	7.50
5"	34	VEFL 740	133.0 139.7 139.7	6.5 4.0 10.0	152.40	184	92.08	180.0	120	17.00	M 16 x 50	$^5/_8$" x 2"	11.00

VE-LOCK®

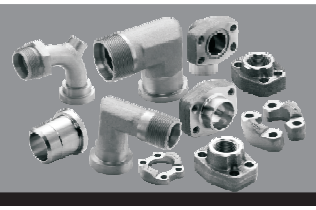

BUTT WELD LOOSE HEAD FLANGE

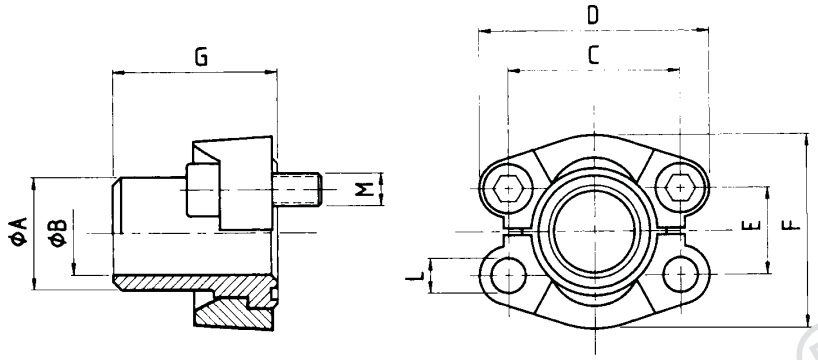

Material: 1 ST 52.3 (FE 510)

3.000 Series														
Size	Maximum Working Pressure kg/cm³	VE-LOCK® ITEM CODE	Tube Ø A	Tube Wall S	C	D	E	F	G	L	M (Screws) Metric	M (Screws) UNC	Weight kg
1/2"	345	VEFL 741	16.0 20.0 21.3 21.3 21.3	2.0 2.5 2.9 3.8 4.7	38.10	54	17.48	45.6	41	8.5	M 8 x 25	5/16" x 1 1/4"	0.08
3/4"	345	VEFL 742	25.0 26.9 26.9	3.0 3.6 3.9	47.63	65	22.23	51.8	50	10.5	M 10 x 30	3/8" x 1 1/4"	0.16
1"	345	VEFL 743	25.0 30.0 30.0 33.7 38.0 38.0	3.0 3.0 4.0 4.5 4.0 5.0	52.37	70	26.19	58.4	50	10.5	M 10 x 30	3/8" x 1 1/4"	0.23
1 1/4"	276	VEFL 744	25.0 30.0 38.0 38.0 38.0 42.4 42.4 42.4	3.0 3.0 3.0 4.0 5.0 3.6 4.5 6.3	58.72	79	30.18	72.6	55	12	-	7/16" x 1 1/2"	0.30
										11	M 10 x 30	-	
										12.5	M 12 x 40	-	
1 1/2"	207	VEFL 745	38.0 42.0 42.0 45.0 48.3 48.3 48.3 48.3 48.3 50.0	4.0 3.0 5.0 5.0 2.6 3.6 5.0 6.3 7.1 6.0	69.85	94	35.71	82.2	57	13.5	M 12 x 35	1/2" x 1 1/2"	0.40
2"	207	VEFL 746	48.3 55.0 60.3 60.3 60.3 60.3 60.3	5.0 5.0 2.9 3.9 5.0 6.3 8.0	77.77	102	42.88	96.4	57	13.5	M 12 x 35	1/2" x 1 1/4"	0.50
2 1/2"	172	VEFL 747	65.0 70.0 76.1 76.1	6.0 7.5 5.5 7.1	88.90	114	50.80	108.20	58	13.5	M 12 x 40	1/2" x 1 3/4"	0.80

VE-LOCK®

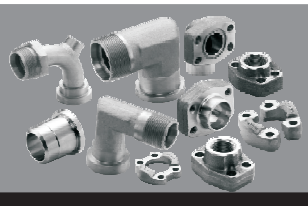

BUT WELD LOOSE HEAD FLANGE

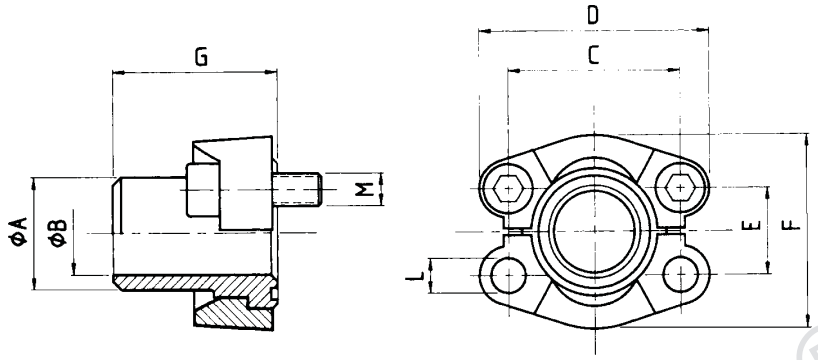

Material: 1 ST 52.3 (FE 510)

3000 Series

3.000 Series													
Size	Maximum Working Pressure kg/cm³	VE-LOCK® ITEM CODE	Tube		C	D	E	F	G	L	M (Screws)		Weight kg
			Ø	Wall							Metric	UNC	
			A	S									
3"	138	VEFL 748	80.0 88.9 88.9 88.9 88.9	6.0 3.2 3.9 7.0 8.0	106.38	135	61.93	130.6	58	16.75	M 16 x 45	$^5/_8$" x 2"	1.10
3$^1/_2$"	34	VEFL 749	100.0 88.9 88.9	6.0 3.6 8.0	120.65	152	69.85	139.0	60	17.00	M 16 x 45	$^5/_8$" x 2"	1.40
4"	34	VEFL 750	110.0 114.3 114.3 114.3	6.0 3.6 6.02 8.8	130.18	162	77.77	152.0	60	17.00	M 16 x 50	$^5/_8$" x 2"	1.75
5"	34	VEFL 751	133.0 139.7 139.7	6.5 4.0 10.0	152.40	184	92.08	180.0	60	17.00	M 16 x 50	$^5/_8$" x 2"	2.62

VE-LOCK®

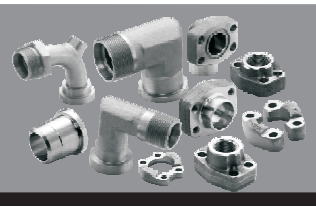

BUTT WELD LOOSE HEAD FLANGE

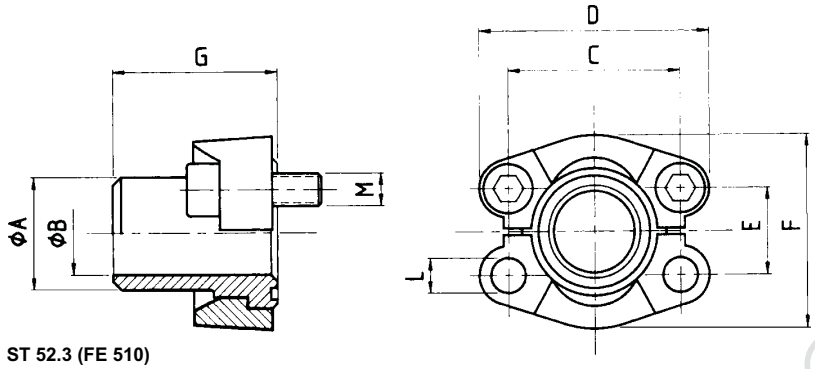

Material: 1 ST 52.3 (FE 510)

6000 Series

6.000 psi													
Size	Maximum Working Pressure kg/cm³	VE-LOCK® ITEM CODE	Tube Ø A	Tube Wall S	C	D	E	F	G	L	M (Screws) Metric	M (Screws) UNC	Weight kg
1/2"	414	VEFL 752	16.0 20.0 21.3	2.0 2.5 4.5	40.49	56	18.24	47.2	34	8.5	M 8 x 30	5/16" x 1 1/4"	0.08
3/4"	414	VEFL 753	16.0 20.0 25.0 25.0 25.0 26.9	2.0 2.5 3.0 3.5 4.0 5.6	50.80	71	23.80	60.0	38	10.5	M 10 x 35	3/8" x 1 1/2"	0.17
1"	414	VEFL 754	25.0 30.0 30.0 33.7 33.7 38.4 38.0	3.0 3.0 4.0 6.3 7.1 4.0 5.0	57.15	81	27.76	69.6	40	12.0	-	7/16" x 1 3/4"	0.25
										12.5	M 12 x 45	-	
1 1/4"	414	VEFL 755	25.0 30.0 38.0 38.0 38.0 42.4	3.0 4.0 4.0 5.0 5.5 6.3	66.68	95	31.75	77.2	45	13.5	-	1/2" x 1 3/4"	0.30
										14.5	M 14 x 50	-	
1 1/2"	414	VEFL 756	38.0 45.0 48.3 48.3 48.3 48.3 48.3 50.0	5.0 6.5 5.0 6.3 7.1 8.0 8.8 6.0	79.38	113	36.50	95.0	50	16.75	M 16 x 55	5/8" x 2"	0.53
2"	414	VEFL 757	48.3 60.3 60.3 60.3 60.3 60.3 60.3	6.3 6.3 7.5 8.0 8.75 10.0 13.4	96.82	133	44.45	113.8	58	21.0	M 20 x 65	3/4" x 2 1/2"	0.90
2 1/2"	414	VEFL 758	76.1 76.1 88.9 88.9 88.9	8.0 10.0 10.0 11.1 14.2	123.80	180	58.80	150.2	75	26.0	M 24 x 75	-	2.40
3"	414	VEFL 759	88.9 88.9 88.9 114.3 114.3	10.0 11.1 14.2 11.0 17.5	152.40	215	71.60	198.2	80	31	M 30 x 90	-	3.60

VE-LOCK®

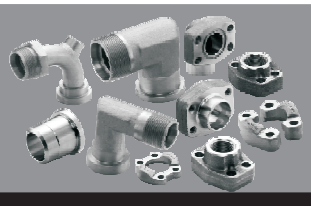

BUTT WELD NIPPLE ADAPTOR FOR USE WITH SAE FLANGE CLAMP

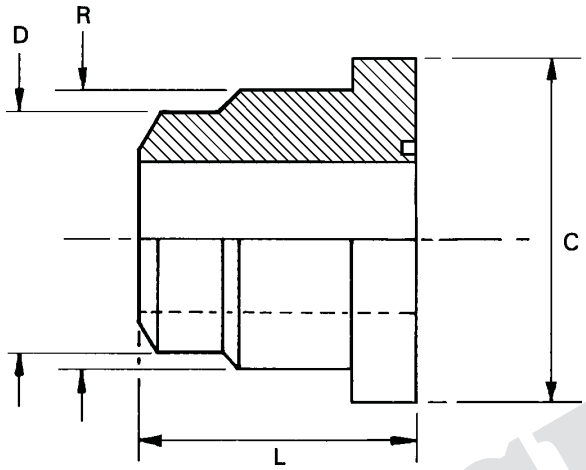

Material: 1 ST 52.3 (FE 510).....Mild Steel
2. 1.4404 316L.....Stainless Steel

3.000 Series					
Size	VE-LOCK® ITEM CODE	ØC	ØD	L	ØR
1/2"	VEFL 760	30.2	14.5	30	24
3/4"	VEFL 761	38.1	20.5	30	32
1"	VEFL 762	44.4	28.0	35	38
1 1/4"	VEFL 763	50.8	33.0	35	43
1 1/2"	VEFL 764	60.3	42.0	35	50
2"	VEFL 765	71.4	52.0	35	62
2 1/2"	VEFL 766	84.1	65.0	40	74
3"	VEFL 767	101.6	81.0	45	90
3 1/2"	VEFL 768	114.3	93.0	45	102
4"	VEFL 769	127.0	106.0	45	114
5"	VEFL 770	152.4	131.0	50	140
6.000 Series					
1/2"	VEFL 771	31.8	14.5	30	24
3/4"	VEFL 772	41.3	20.5	40	32
1"	VEFL 773	47.6	28.0	45	38
1 1/4"	VEFL 774	54.0	33.0	45	44
1 1/2"	VEFL 775	63.5	42.0	50	51
2"	VEFL 776	79.4	52.0	60	67
2 1/2"	VEFL 777	108.0	65.0	75	89
3"	VEFL 778	132.0	81.0	80	114

VE-LOCK®

SAE (MALE) BSPP ADAPTORS

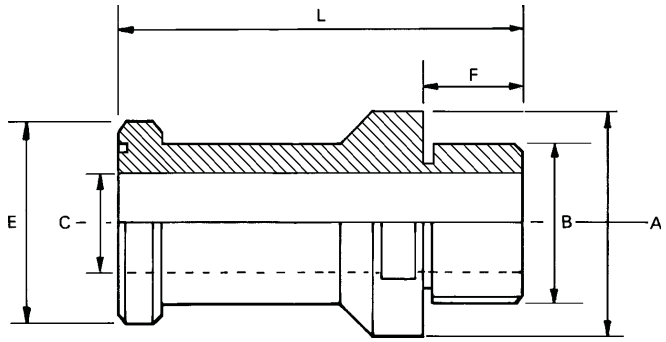

Material: 1 ST 52.3 (FE 510).....Mild Steel
2. 1.4404 316L.....Stainless Steel

NB: Also to customer specification

3.000 Series							
Size	VE-LOCK® ITEM CODE	ØA	B	ØC	ØE	F	L
1/2"	VEFL 779	25	1/2"	14	30.2	20	80
3/4"	VEFL 780	40	3/4"	19	37.4	20	80
1"	VEFL 781	45	1"	25	44.4	20	84
1 1/4"	VEFL 782	55	1 1/4"	32	50.8	23	95
1 1/2"	VEFL 783	65	1 1/2"	38	60.3	25	100
2"	VEFL 784	80	2"	51	71.4	27	103
2 1/2"	VEFL 785	90	2 1/2"	63	84.3	27	115
3"	VEFL 786	100	3"	73	101.6	27	120
3 1/2"	VEFL 787	120	3 1/2"	89	114.5	27	125
4"	VEFL 788	140	4"	99	127.6	27	125
6.000 Series							
1/2"	VEFL 789	25	1/2"	13	31.7	20	85
3/4"	VEFL 790	40	3/4"	19	41.8	20	90
1"	VEFL 791	45	1"	25	47.6	20	100
1 1/4"	VEFL 792	55	1 1/4"	31	54.0	20	110
1 1/2"	VEFL 793	65	1 1/2"	38	63.7	20	120
2"	VEFL 794	80	2"	51	79.4	20	130

VE-LOCK®

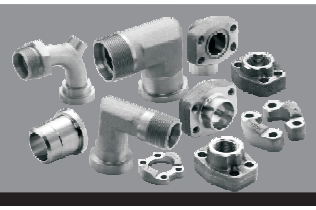

SAE (FEMALE) SOCKET WELD ADAPTORS

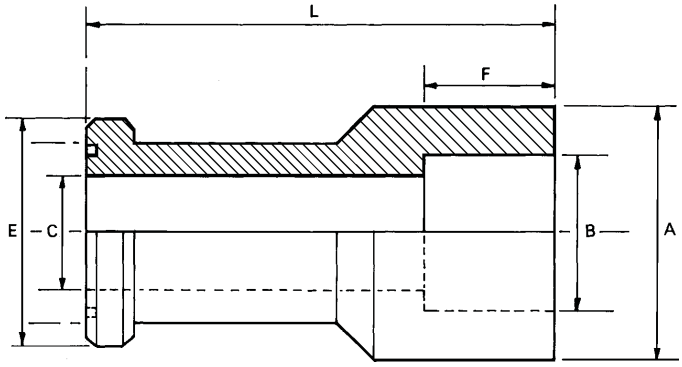

Material: 1 ST 52.3 (FE 510).....Mild Steel
2. 1.4404 316L.....Stainless Steel

NB: Also to customer specification

3.000 Series							
Size	VE-LOCK® ITEM CODE	ØA	B	ØC	ØE	F	L
1/2"	VEFL 795	35	21.6	14	30.0	18	80
3/4"	VEFL 796	40	27.2	19	38.0	18	80
1"	VEFL 797	45	34.0	25	44.4	18	84
1 1/4"	VEFL 798	55	42.8	32	50.8	20	95
1 1/2"	VEFL 799	65	48.6	38	60.3	22	100
2"	VEFL 800	80	61.0	51	71.4	24	103
2 1/2"	VEFL 801	96	76.6	63	84.0	28	110
3"	VEFL 802	120	90.5	73	101.5	28	115
3 1/2"	VEFL 803	130	103.0	89	114.5	28	120
4"	VEFL 804	145	115.5	99	127.5	28	120
6.000 Series							
1/2"	VEFL 805	37	17.5	13	32.0	18	90
3/4"	VEFL 806	47	27.2	19	41.0	20	95
1"	VEFL 807	55	34.0	25	47.5	22	100
1 1/4"	VEFL 808	65	42.8	31	54.0	22	120
1 1/2"	VEFL 809	70	48.6	38	63.5	24	130
2"	VEFL 810	90	61.0	51	79.5	24	140

VE-LOCK®

SAE BSPP FEMALE ADAPTORS

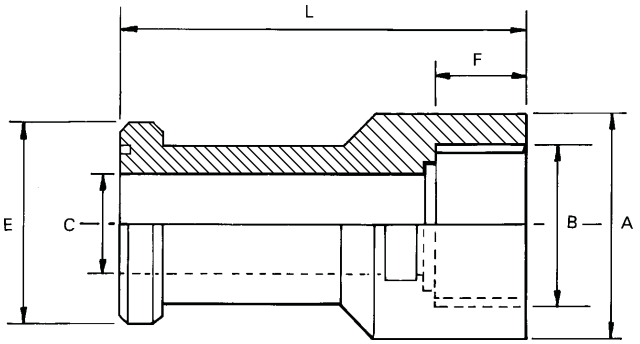

Material: 1 ST 52.3 (FE 510).....Mild Steel
2. 1.4404 316L.....Stainless Steel

NB: Also to customer specification

3.000 Series							
Size	VE-LOCK® ITEM CODE	A	B	C	E	F	L
1/2"	VEFL 811	25	1/2"	14	30.2	20	80
3/4"	VEFL 812	40	3/4"	19	37.4	20	80
1"	VEFL 813	45	1"	25	44.4	20	84
1 1/4"	VEFL 814	55	1 1/4"	32	50.8	23	95
1 1/2"	VEFL 815	65	1 1/2"	38	60.3	25	100
2"	VEFL 816	80	2"	51	71.4	27	103
2 1/2"	VEFL 817	90	2 1/2"	63	84.3	27	115
3"	VEFL 818	100	3"	73	101.6	27	120
3 1/2"	VEFL 819	120	3 1/2"	89	114.5	27	125
4"	VEFL 820	140	4"	99	127.6	27	125
6.000 Series							
1/2"	VEFL 821	25	1/2"	13	31.7	20	85
3/4"	VEFL 822	40	3/4"	19	41.8	20	90
1"	VEFL 823	45	1"	25	47.6	20	100
1 1/4"	VEFL 824	55	1 1/4"	31	54.0	20	110
1 1/2"	VEFL 825	65	1 1/2"	38	63.7	20	120
2"	VEFL 826	80	2"	51	79.4	20	130

VE-LOCK®

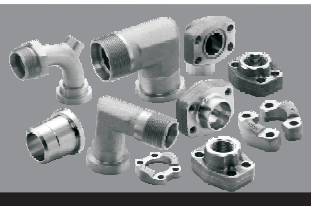

SAE-METRIC THREADED FLANGE DIN 3901/3902

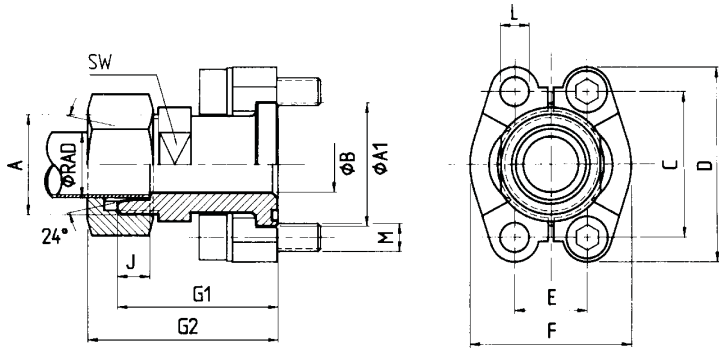

Material: 1 9SMnPb28K/C15.....mild steel - zinc plated, yellow chromated
2. 1.4571, 316Ti.....stainless steel

3.000 Series																		
Size	Maximum Working Pressure kg/cm²	VE-LOCK® ITEM CODE	A	A_1	B	C	D	E	F	G_1	G_2	J	ØL	SW	M (Screws)		Weight kg
															Metric	UNC	
1/2"	315	VEFL 827	M 22 x 1.5	30.2	16/20	38.10	54	17.48	45.6	48.2	56	7.0	8.5	24	M 8 x 30	5/16" x 1 1/4"	0.29
1/2"	350	VEFL 828	M 24 x 1.5	30.2	13.0	38.10	54	17.48	45.6	50.2	60	8.5	8.5	24	M 8 x 30	5/16" x 1 1/4"	0.32
3/4"	315	VEFL 829	M 26 x 1.5	38.1	15/20	47.63	65	22.23	51.8	53.2	62	7.5	10.5	30	M 10 x 35	3/8" x 1 1/2"	0.55
3/4"	160	VEFL 830	M 30 x 2.0	38.1	19	47.63	65	22.23	51.8	53.2	62	7.5	10.5	30	M 10 x 35	3/8" x 1 1/2"	0.56
3/4"	160	VEFL 831	M 36 x 2.0	38.1	19	47.63	65	22.23	51.8	53.2	62	7.5	10.5	30	M 10 x 35	3/8" x 1 1/2"	0.75
3/4"	350	VEFL 832	M 30 x 2.0	38.1	16/20	47.63	65	22.23	51.8	57.2	68	10.5	10.5	30	M 10 x 35	3/8" x 1 1/2"	0.63
3/4"	350	VEFL 833	M 36 x 2.0	38.1	17	47.63	65	22.23	51.8	57.2	69	12.0	10.5	30	M 10 x 35	3/8" x 1 1/2"	0.76
1"	160	VEFL 834	M 36 x 2.0	44.4	24	52.37	70	26.19	58.4	54.2	65	7.5	10.5	36	M 10 x 35	3/8" x 1 1/2"	0.69
1"	350	VEFL 835	M 36 x 2.0	44.4	20	52.37	70	26.19	58.4	58.2	70	12.0	10.5	36	M 10 x 35	3/8" x 1 1/2"	0.78
1"	350	VEFL 836	M 42 x 2.0	44.4	24	52.37	70	26.19	58.4	63.2	76	13.5	10.5	36	M 10 x 35	3/8" x 1 1/2"	0.91
1 1/4"	160	VEFL 837	M 36 x 2.0	50.8	22	58.72	79	30.18	72.6	58.6	67	7.5	10.5	36	M 10 x 30	-	1.05
													12.5		M 12 x 40	-	
													12.0		-	7/16" x 1 1/4"	
1 1/4"	160	VEFL 838	M 45 x 2.0	50.8	30/32	58.72	79	30.18	72.6	58.6	69	10.5	10.5	41	M 10 x 30	-	1.10
													12.5		M 12 x 40	-	
													12.0		-	7/16" x 1 1/4"	
1 1/4"	280	VEFL 839	M 36 x 2.0	50.8	20/27	58.72	79	30.18	72.6	60.2	72	12.0	10.5	41	M 10 x 30	-	1.17
													12.5		M 12 x 40	-	
													12.0		-	7/16" x 1 1/4"	
1 1/4"	280	VEFL 840	M 42 x 2.0	50.8	25/28	58.72	79	30.18	72.6	62.2	75	13.5	10.5	41	M 10 x 30	-	1.19
													12.5		M 12 x 40	-	
													12.0		-	7/16" x 1 1/4"	
1 1/4"	280	VEFL 841	M 52 x 2.0	50.8	28	58.72	79	30.18	72.6	66.6	81	16.0	10.5	46	M 10 x 30	-	1.39
													12.5		M 12 x 40	-	
													12.0		-	7/16" x 1 1/4"	
1 1/4"	160	VEFL 842	M 52 x 2.0	60.3	36	69.85	94	35.71	82.2	64.2	76	11.0	13.5	46	M 12 x 40	7/16" x 1 1/4"	1.34
1 1/4"	210	VEFL 843	M 52 x 2.0	60.3	32	69.85	94	35.71	82.2	70.2	85	16.0	13.5	46	M 12 x 40	7/16" x 1 1/4"	1.50

VE-LOCK ®

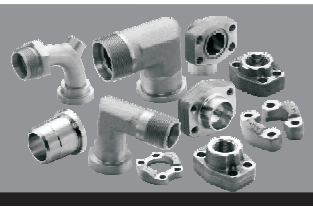

SAE-METRIC THREADED FLANGE DIN 3901/3902

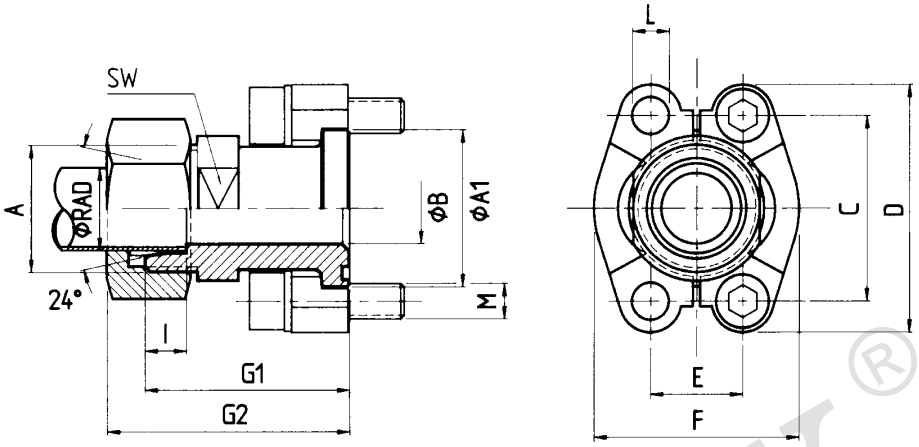

Material: 1 9SMnPb28K/C15.....mild steel - zinc plated, yellow chromated
2. 1.4571, 316Ti.....stainless steel

6.000 Series																	
Size	Maximum Working Pressure kg/cm²	VE-LOCK® ITEM CODE	A	A_1	B	C	D	E	F	G_1	G_2	J	L	SW	M (Screws)		Weight kg
															Metric	UNC	
1/2"	400	VEFL 844	M 24 x 1.5	31.7	12	40.49	56	18.24	47.2	53.2	63	8.5	8.5	24	M 8 x 30	5/16" x 1 1/4"	0.46
3/4"	400	VEFL 845	M 24 x 1.5	41.3	12	50.80	71	23.80	60.0	59.2	69	8.5	10.5	30	M 10 x 35	3/8" x 1 1/2"	0.78
3/4"	400	VEFL 846	M 30 x 2.0	41.3	16	50.80	71	23.80	60.0	61.2	72	10.5	10.5	30	M 10 x 35	3/8" x 1 1/2"	0.84
3/4"	400	VEFL 847	M 36 x 2.0	41.3	17	50.80	71	23.80	60.0	63.2	75	12.0	10.5	30	M 10 x 35	3/8" x 1 1/2"	0.96
3/4"	400	VEFL 848	M 42 x 2.0	41.3	18	50.80	71	23.80	60.0	64.0	77	13.5	10.5	36	M 10 x 35	3/8" x 1 1/2"	1.20
1"	400	VEFL 849	M 36 x 2.0	47.6	20	57.15	81	27.76	69.6	72.2	84	12.0	12.0	41	-	7/16" x 1 3/4"	1.42
													12.5		M 12 x 45	-	
1"	400	VEFL 850	M 42 x 2.0	47.6	24	57.15	81	27.76	69.6	74.0	87	13.5	12.0	41	-	7/16" x 1 3/4"	1.52
													12.5		M 12 x 45	-	
1 1/4"	400	VEFL 851	M 42 x 2.0	54.0	25/30	66.68	95	31.75	77.2	79.2	92	13.5	13.5	41	-	1/2" x 1 3/4"	1.93
													14.5		M 14 x 50	-	
1 1/4"	350	VEFL 852	M 52 x 2.0	54.0	30	66.68	95	31.75	77.2	83.2	98	16.0	13.5	46	-	1/2" x 1 3/4"	2.08
													14.5		M 14 x 50	-	
1 1/2"	350	VEFL 853	M 52 x 2.0	63.5	30	79.38	113	36.50	95.0	89.2	104	16.0	16.75	46	M 16 x 55	1/2" x 1 3/4"	3.03

VE-LOCK®

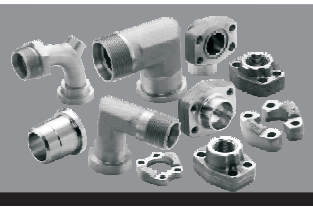

SAE-90^{0}SWEPT ELBOW-TO DIN 3901/3902

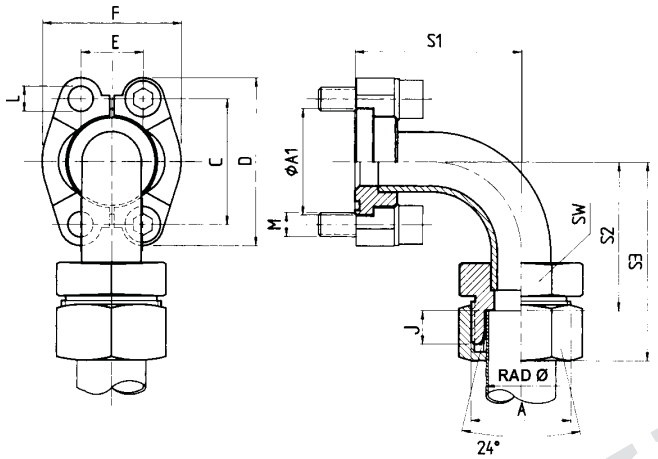

Material: 1 9SMnPb28K/C15.....mild steel - zinc plated, yellow chromated
2. 1.4571, 316Ti.....stainless steel

Size	VE-LOCK® ITEM CODE	A	ØA1	C	D	E	F	J	S_1	S_2	S_3	SW	L	M (Screws) Metric	M (Screws) UNC	Weight (adaptor only) kg
3.000 Series																
$^1/_2$"	VEFL 854	M 22 x 1.5	30.2	38.10	54	17.48	45.6	7.0	40	43.0	58.0	22	8.5	M 8 x 30	$^5/_{16}$" x 1$^1/_4$"	0.14
$^1/_2$"	VEFL 855	M 24 x 1.5	30.2	38.10	54	17.48	45.6	7.5	40	42.5	60.0	24	8.5	M 8 x 30	$^5/_{16}$" x 1$^1/_4$"	0.15
$^3/_4$"	VEFL 856	M 30 x 2.0	38.1	47.63	65	22.23	51.8	7.5	59	63.5	80.0	30	10.5	M 10 x 35	$^3/_8$" x 1$^1/_2$"	0.29
1"	VEFL 857	M 36 x 2.0	44.4	52.37	70	26.19	58.4	7.5	68	75.5	80.0	36	10.5	M 10 x 35	$^3/_8$" x 1$^1/_2$"	0.43
1"	VEFL 858	M 36 x 2.0	44.4	52.37	70	26.19	58.4	12.0	68	71.0	95.0	36	10.5	M 10 x 35	$^3/_8$" x 1$^1/_2$"	0.38
1"	VEFL 859	M 42 x 2.0	44.4	52.37	70	26.19	58.4	13.5	68	69.5	96.0	46	10.5	M 10 x 35	$^3/_8$" x 1$^1/_2$"	0.55
1$^1/_4$"	VEFL 860	M 45 x 2.0	50.8	58.72	79	30.18	72.6	10.5	86	94.5	116.0	46	10.5	M 10 x 30	-	0.76
													12.5	M 12 x 40	-	
													12.0	-	$^7/_{16}$" x 1$^1/_2$"	
1$^1/_4$"	VEFL 861	M 42 x 2.0	50.8	58.72	79	30.18	72.6	13.5	80	102.0	128.5	46	10.5	M 10 x 30	-	0.83
													12.5	M 12 x 40	-	
													12.0	-	$^7/_{16}$" x 1$^1/_2$"	
1$^1/_2$"	VEFL 862	M 52 x 2.0	60.3	69.85	94	35.71	82.6	11.0	98	104.0	127.0	55	13.5	M 12 x 35	$^1/_2$" x 1$^1/_2$"	0.99
1$^1/_2$"	VEFL 863	M 52 x 2.0	60.3	69.85	94	35.71	82.6	16.0	98	99.0	130.0	55	13.5	M 12 x 35	$^1/_2$" x 1$^1/_2$"	0.95
6.000 Series																
$^1/_2$"	VEFL 864	M 24 x 1.5	31.8	40.49	56	18.24	47.2	8.5	40	41.5	60.0	24	8.5	M 8 x 30	$^5/_{16}$" x 1$^1/_4$"	0.16
$^3/_4$"	VEFL 865	M 36 x 2.0	41.3	50.80	71	23.80	60.0	12.0	62	59.0	83.0	36	10.5	M 10 x 35	$^3/_8$" x 1$^1/_2$"	0.37
$^3/_4$"	VEFL 866	M 42 x 2.0	41.3	50.80	71	23.80	60.0	13.5	62	57.5	84.0	46	10.5	M 10 x 35	$^3/_8$" x 1$^1/_2$"	0.49
1"	VEFL 867	M 36 x 2.0	47.6	57.15	81	27.76	69.6	12.0	74	73.0	97.0	36	12.5	M 12 x 45	-	0.43
													12.0	-	$^7/_{16}$" x 1$^3/_4$"	
1"	VEFL 868	M 42 x 2.0	47.6	57.15	81	27.76	69.6	13.5	74	71.5	98.0	46	12.5	M 12 x 45	-	0.59
													12.0	-	$^7/_{16}$" x 1$^3/_4$"	
1$^1/_4$"	VEFL 869	M 52 x 2.0	54.0	66.68	95	31.75	77.2	16.0	96	91.0	122.0	55	13.5	-	$^1/_2$" x 1$^3/_4$"	0.95
													14.5	M 14 x 50		
1$^1/_2$"	VEFL 870	M 52 x 2.0	63.5	79.38	113	36.50	95.0	16.0	111	91.0	122.0	55	16.75	M 16 x 55	$^5/_8$" x 2"	1.13

VE-LOCK®

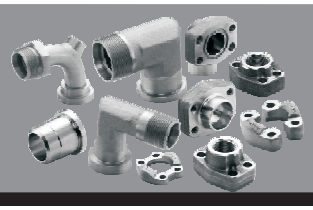

SAE-90^{0}COMPACT ELBOW-METRIC TO DIN 3901/3902

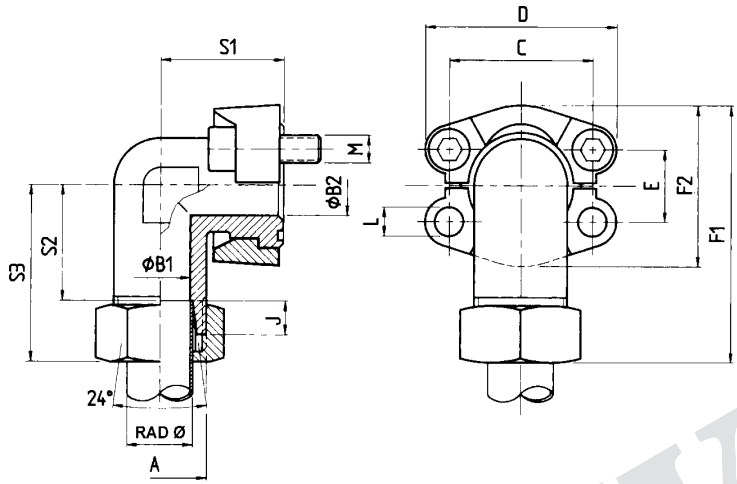

Material: 1 ST 52.3 (FE 510).....carbon steel - zinc plated, yellow chromated
2. 1.4571 316T.....stainless steel

3.000 Series																
Size	VE-LOCK® ITEM CODE	A	B_1	B_2	C	D	E	F_1	F_2	J	ØL	S_1	S_2	S_3	M	Weight kg
$^1/_2$"	VEFL 871	M 22 x 1.5	12	11	38.10	54.0	17.48	66.8	45.6	7.0	8.5	39	29.0	44	M 8 x 30	0.39
$^1/_2$"	VEFL 872	M 24 x 1.5	12	11	38.10	54.0	17.48	70.8	45.6	8.5	8.5	39	29.5	48	M 8 x 30	0.43
$^3/_4$"	VEFL 873	M 26 x 1.5	15	19	47.63	64.9	22.23	73.9	51.8	7.5	10.5	42	31.5	48	M 10 x 35	0.63
$^3/_4$"	VEFL 874	M 30 x 2.0	19	19	47.63	64.9	22.23	75.9	51.8	7.5	10.5	42	33.5	50	M 10 x 35	0.66
$^3/_4$"	VEFL 875	M 30 x 2.0	16	19	47.63	64.9	22.23	79.9	51.8	10.5	10.5	42	32.5	54	M 10 x 35	0.71
$^3/_4$"	VEFL 876	M 36 x 2.0	17	19	47.63	64.9	22.23	82.9	51.8	12.0	10.5	42	33.0	57	M 10 x 35	0.84
1"	VEFL 877	M 36 x 2.0	24	25	52.37	69.9	26.19	82.9	58.4	7.5	10.5	45	36.5	53	M 10 x 35	0.82
1"	VEFL 878	M 36 x 2.0	20	25	52.37	69.9	26.19	91.2	58.4	12.0	10.5	45	38.0	62	M 10 x 35	0.94
1"	VEFL 879	M 42 x 2.0	24	25	52.37	69.9	26.19	92.2	58.4	13.5	10.5	45	36.5	63	M 10 x 35	1.02
$1^1/_4$"	VEFL 880	M 45 x 2.0	30	27	58.72	79.4	30.18	104.3	72.6	10.5	10.5	50	46.5	68	M 10 x 30	1.19
											12.5				M 12 x 40	
$1^1/_4$"	VEFL 881	M 36 x 2.0	20	27	58.72	79.4	30.18	103.3	72.6	12.0	10.5	50	43.0	67	M 10 x 30	1.40
											12.5				M 12 x 40	
$1^1/_4$"	VEFL 882	M 42 x 2.0	25	27	58.72	79.4	30.18	106.3	72.6	13.5	10.5	50	43.5	70	M 10 x 30	1.48
											12.5				M 12 x 40	
$1^1/_2$"	VEFL 883	M 52 x 2.0	28	27	58.72	79.4	30.18	110.3	72.6	16.0	10.5	50	43.0	74	M 10 x 30	1.55
											12.5				M 12 x 40	
$1^1/_2$"	VEFL 884	M 52 x 2.0	36	36	69.85	93.8	35.71	118.2	82.4	11.0	13.5	76	56.0	77	M 12 x 40	1.97
$1^1/_2$"	VEFL 885	M 52 x 2.0	32	36	69.85	93.8	35.71	128.2	82.4	16.0	13.5	76	56.0	87	M 12 x 40	2.12

VE-LOCK®

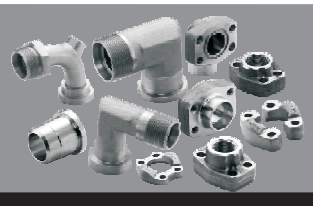

SAE-FLANGE ADAPTRO 90^0 - METRIC TO DIN 3901/3902

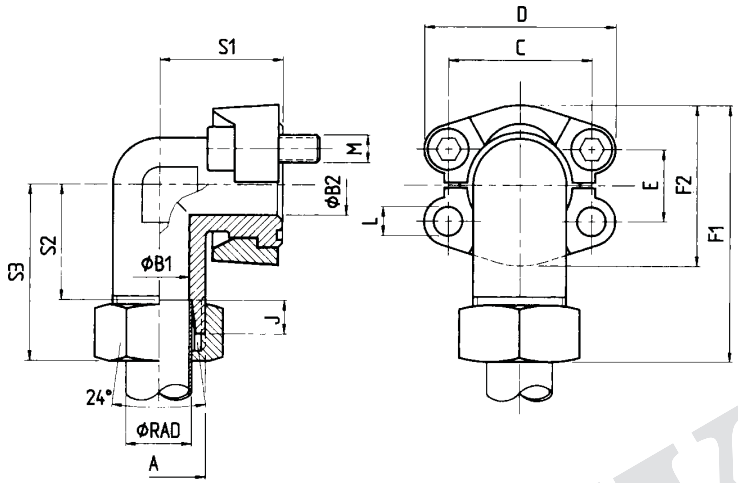

Material: 1 ST 52.3 (FE 510).....Carbon Steel
2. 1.4571 316T.....Stainless Steel

6.000 Series																
Size	VE-LOCK® ITEM CODE	A	B_1	B_2	C	D	E	F_1	F_2	J	ØL	S_1	S_2	S_3	M	Weight kg
$^1/_2$"	VEFL 886	M 24 X 1.5	12	12	40.49	56.4	18.24	71.6	47.2	8.5	8.5	39	29.4	48	M 8 X 30	0.69
$^3/_4$"	VEFL 887	M 24 X 1.5	12	17	50.80	71.3	23.80	85.0	60.0	8.5	10.5	48	36.5	55	M 10 X 35	0.92
$^3/_4$"	VEFL 888	M 30 X 2.0	16	17	50.80	71.3	23.80	87.0	60.0	10.5	10.5	48	35.5	57	M 10 X 35	0.96
$^3/_4$"	VEFL 889	M 36 X 2.0	17	17	50.80	71.3	23.80	90.0	60.0	12.0	10.5	48	36.0	60	M 10 X 35	1.09
1"	VEFL 890	M 36 X 2.0	20	24	57.15	81.0	27.76	99.8	69.0	12.0	12.5	60	41.0	65	M 12 X 45	1.60
1"	VEFL 891	M 42 X 2.0	24	24	57.15	81.0	27.76	102.85	69.0	13.5	12.5	60	41.5	68	M 12 X 45	1.70
$1^1/_4$"	VEFL 892	M 42 X 2.0	25	31	66.68	95.2	31.75	109.6	77.2	13.5	14.5	68	44.5	71	M 14 X 50	2.22
$1^1/_4$"	VEFL 893	M 52 X 2.0	28	31	66.68	95.2	31.75	114.6	77.2	16.0	14.5	68	45.0	76	M 14 X 50	2.32
$1^1/_2$"	VEFL 894	M 52 X 2.0	30	36	79.38	112.8	36.50	134.5	95.0	16.0	16.5	76	56.0	87	M 16 X 55	3.55

VE-LOCK®

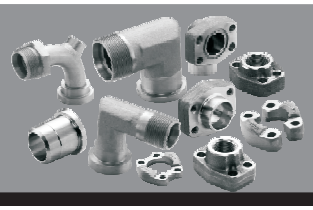

SAE - 90° COMPACT ELBOW JIC MALE

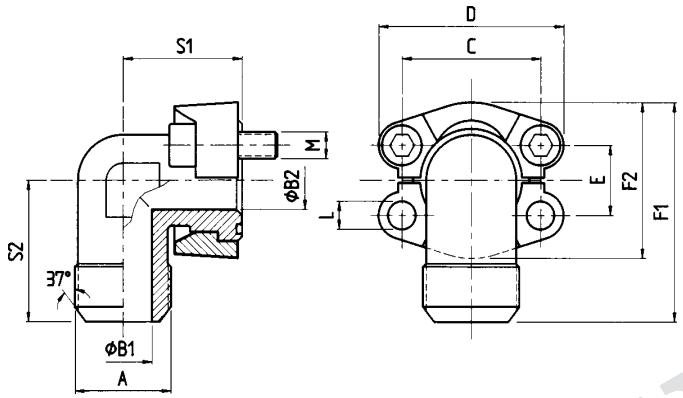

Material: 1 ST 52.3 (FE 510).....carbon steel - zinc plated, yellow chromated.
2. 1.4571 316T.....stainless steel

3.000 Series															
Size	VE-LOCK® ITEM CODE	A	B_1	B_2	C	D	E	F_1	F_2	S_1	S_2	ØL	M (Screws)		Weight kg
													Metric	UNC	
$^1/_2$"	VEFL 895	$^3/_4$" -16 JIC	9.9	13	38.10	54	17.48	60.8	45.6	38	38	8.5	M 8 x 30	$^5/_{16}$" x $1^1/_4$"	0.34
$^1/_2$"	VEFL 896	$^7/_8$" -14 JIC	12.3	13	38.10	54	17.48	60.8	45.6	38	38	8.5	M 8 x 30	$^5/_{16}$" x $1^1/_4$"	0.40
$^3/_4$"	VEFL 897	$^7/_8$" -14 JIC	12.3	19	47.63	65	22.23	70.9	51.8	42	45	10.5	M 10 x 35	$^3/_8$" x $1^1/_2$"	0.60
$^3/_4$"	VEFL 898	$1^1/_{16}$" -12 JIC	15.5	19	47.63	65	22.23	70.9	51.8	42	45	10.5	M 10 x 35	$^3/_8$" x $1^1/_2$"	0.63
$^3/_4$"	VEFL 899	$1^5/_{16}$" -12 JIC	21.5	19	47.63	65	22.23	70.9	51.8	42	45	10.5	M 10 x 35	$^3/_8$" x $1^1/_2$"	0.66
1"	VEFL 900	$1^1/_{16}$" -12 JIC	15.5	24	52.37	70	26.19	79.2	58.4	45	50	10.5	M 10 x 35	$^3/_8$" x $1^1/_2$"	0.80
1"	VEFL 901	$1^5/_{16}$" -12 JIC	21.5	24	52.37	70	26.19	79.2	58.4	45	50	10.5	M 10 x 35	$^3/_8$" x $1^1/_2$"	0.85
1"	VEFL 902	$1^5/_8$" -12 JIC	27.5	24	52.37	70	26.19	79.2	58.4	45	50	10.5	M 10 x 35	$^3/_8$" x $1^1/_2$"	0.89
$1^1/_4$"	VEFL 903	$1^5/_{16}$" -12 JIC	21.5	31	58.72	79	30.18	85.3	72.6	50	59	10.5	M 10 x 30	-	1.16
												12.5	M 12 x 30	-	
												12.0	-	$^7/_{16}$" x $1^1/_2$"	
$1^1/_4$"	VEFL 904	$1^5/_8$" -12 JIC	27.5	31	58.72	79	30.18	85.3	72.6	50	59	*1	*2	$^7/_{16}$" x $1^1/_2$"	1.27
$1^1/_2$"	VEFL 905	$1^5/_8$" -12 JIC	27.5	38	69.85	94	35.71	117.1	82.2	76	76	13.5	M 12 x 40	$^1/_2$" x $1^1/_2$"	1.90
$1^1/_2$"	VEFL 906	$1^7/_8$" -12 JIC	33.0	38	69.85	94	35.71	117.1	82.2	76	76	13.5	M 12 x 40	$^1/_2$" x $1^1/_2$"	2.05

VE-LOCK®

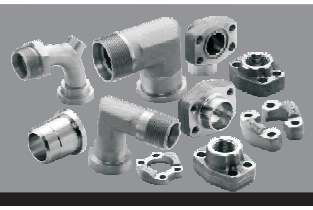

SAE - 90° COMPACT ELBOW - JIC MALE

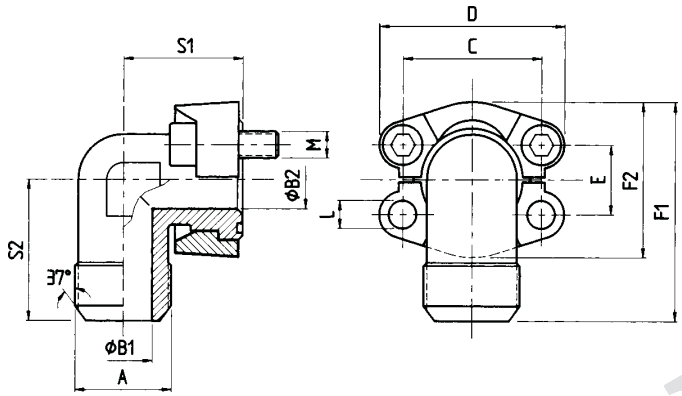

Material: 1 ST 52.3 (FE 510).....carbon steelb - zinc plated, yellow chromated
2. 1.4571 316T.....stainless steel

6.000 Series															
Size	VE-LOCK® ITEM CODE	A	B_1	B_2	C	D	E	F_1	F_2	S_1	S_2	ØL	M (Screws)		Weight kg
													Metric	UNC	
1/2"	VEFL 907	3/4" -16 JIC	9.9	13	40.49	56	18.24	61.6	47.2	39	38	8.5	M 8 x 30	5/16" x 1 1/4"	0.37
1/2"	VEFL 908	7/8" -14 JIC	12.3	13	40.49	56	18.24	61.6	47.2	39	38	8.5	M 8 x 30	5/16" x 1 1/4"	0.45
3/4"	VEFL 909	7/8" -14 JIC	12.3	17	50.80	71	23.80	78.0	60.0	48	48	10.5	M 10 x 35	3/8" x 1 1/2"	0.88
3/4"	VEFL 910	1 1/16" -12 JIC	15.5	17	50.80	71	23.80	78.0	60.0	48	48	10.5	M 10 x 35	3/8" x 1 1/2"	0.97
3/4"	VEFL 911	1 5/16" -12 JIC	21.5	17	50.80	71	23.80	78.0	60.0	48	48	10.5	M 10 x 35	3/8" x 1 1/2"	1.02
1"	VEFL 912	1 1/16" -12 JIC	15.5	24	57.15	81	27.76	99.0	69.9	60	60	12.0	M 12 x 45	-	1.46
												12.5	-	7/16" x 1 3/4"	
1"	VEFL 913	1 5/16" -12 JIC	21.5	24	57.15	81	27.76	99.0	69.9	60	60	12.0	M 12 x 45	-	1.57
												12.5	-	7/16" x 1 3/4"	
1"	VEFL 914	1 5/8" -12 JIC	27.5	24	57.15	81	27.76	99.0	69.9	60	60	12.0	M 12 x 45	-	1.70
												12.5	-	7/16" x 1 3/4"	
1 1/4"	VEFL 915	1 5/16" -12 JIC	21.5	30	66.68	95	31.75	115.5	77.2	68	68	13.5	M 14 x 50	-	2.20
												14.5	-	1/2" x 1 3/4"	
1 1/4"	VEFL 916	1 5/8" -12 JIC	27.5	30	66.68	95	31.75	115.5	77.2	68	68	13.5	M 14 x 50	-	2.30
												14.5	-	1/2" x 1 3/4"	
1 1/4"	VEFL 917	1 7/8" -12 JIC	33.0	30	66.68	95	31.75	115.5	77.2	68	68	13.5	M 14 x 50	-	2.45
												14.5	-	1/2" x 1 3/4"	
1 1/2"	VEFL 918	1 5/8" -12 JIC	27.5	32	79.38	113	36.50	133	95.0	76	76	16.5	M 16 x 55	5/8" x 2"	3.08
1 1/2"	VEFL 919	1 7/8" -12 JIC	33.0	32	79.38	113	36.50	133	95.0	76	76	16.5	M 16 x 55	5/8" x 2"	3.45

VE-LOCK®

VE-LOCK

SAE-WELD ON FLANGE ADAPTOR 90° FOR METRIC PIPES

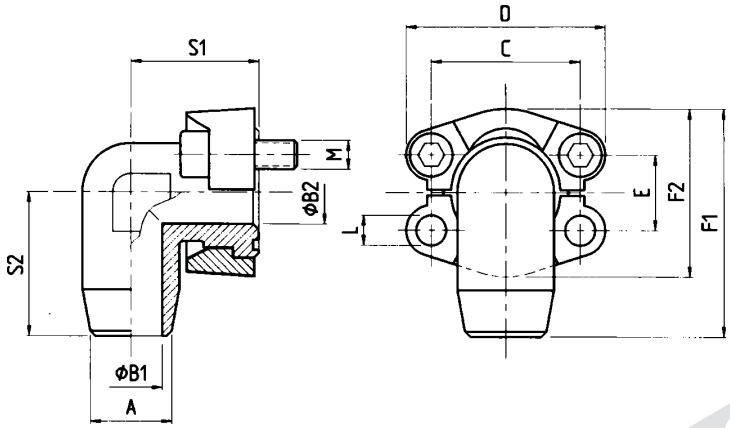

Material: 1 ST 52.3 (FE 510).....carbon steel
2. 1.4571 316T.....stainless steel

3.000 Series															
Size	VE-LOCK® ITEM CODE	A	B_1	B_2	C	D	E	F_1	F_2	S_1	S_2	ØL	M (Screws)		Weight kg
													Metric	UNC	
$^1/_2$"	VEFL 920	15	11	11	38.10	54	17.48	60.8	45.6	39	38	8.5	M 8 x 30	$^5/_{16}$" x 1$^1/_4$"	0.36
$^1/_2$"	VEFL 921	16	10	10	38.10	54	17.48	60.8	45.6	39	38	8.5	M 8 x 30	$^5/_{16}$" x 1$^1/_4$"	0.37
$^3/_4$"	VEFL 922	18	15	19	47.63	64.9	22.23	70.9	51.8	42	45	10.5	M 10 x 35	$^3/_8$" x 1$^1/_2$"	0.57
$^3/_4$"	VEFL 923	20	14	17	47.63	64.9	22.23	70.9	51.8	42	45	10.5	M 10 x 35	$^3/_8$" x 1$^1/_2$"	0.58
$^3/_4$"	VEFL 924	22	18	19	47.63	64.9	22.23	70.9	51.8	42	45	10.5	M 10 x 35	$^3/_8$" x 1$^1/_2$"	0.59
$^3/_4$"	VEFL 925	25	17	17	47.63	64.9	22.23	70.9	51.8	42	45	10.5	M 10 x 35	$^3/_8$" x 1$^1/_2$"	0.64
1"	VEFL 926	25	19	21	52.37	69.9	26.19	79.2	58.4	45	50	10.5	M 10 x 35	$^3/_8$" x 1$^1/_2$"	0.77
1"	VEFL 927	28	24	25	52.37	69.9	26.19	79.2	58.4	45	50	10.5	M 10 x 35	$^3/_8$" x 1$^1/_2$"	0.79
1"	VEFL 928	30	21	21	52.37	69.9	26.19	79.2	58.4	45	50	10.5	M 10 x 35	$^3/_8$" x 1$^1/_2$"	0.84
1$^1/_4$"	VEFL 929	25	19	27	58.72	79.4	30.18	85.3	72.6	50	59	10.5	M 10 x 30	-	1.13
												12.5	M 12 x 40	-	
												12.0	-	$^7/_{16}$" x 1$^1/_2$"	
1$^1/_4$"	VEFL 930	30	22	27	58.72	79.4	30.18	85.3	72.6	50	59	10.5	M 10 x 30	-	1.17
												12.5	M 12 x 40	-	
												12.0	-	$^7/_{16}$" x 1$^1/_2$"	
1$^1/_4$"	VEFL 931	35	31	32	58.72	79.4	30.18	85.3	72.6	50	59	10.5	M 10 x 30	-	1.18
												12.5	M 12 x 40	-	
												12.0	-	$^7/_{16}$" x 1$^1/_2$"	
1$^1/_4$"	VEFL 932	38	28	27	58.72	79.4	30.18	85.3	72.6	50	59	10.5	M 10 x 30	-	1.37
												12.5	M 12 x 40	-	
												12.0	-	$^7/_{16}$" x 1$^1/_2$"	
1$^1/_2$"	VEFL 933	38	30	32	69.85	93.8	35.71	117.1	82.2	76	76	13.5	M 12 x 40	$^1/_2$" x 1$^1/_2$"	1.95
1$^1/_2$"	VEFL 934	42	36	36	69.85	93.8	35.71	117.1	82.2	76	76	13.5	M 12 x 40	$^1/_2$" x 1$^1/_2$"	2.04

VE-LOCK®

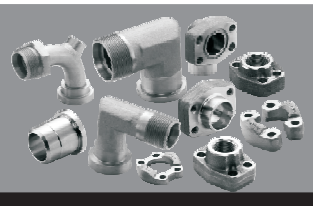

SAE-WELD ON FLANGE ADAPTOR 90° FOR METRIC PIPES

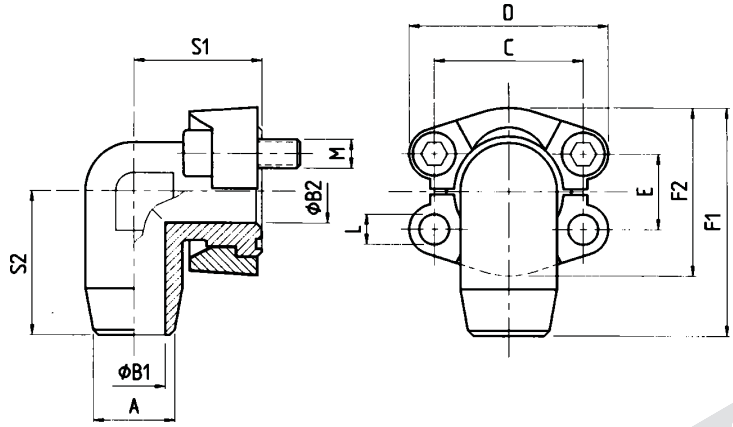

Material: 1 ST 52.3 (FE 510).....carbon steel
2. 1.4571 316T.....stainless steel

6.000 Series															
Size	VE-LOCK® ITEM CODE	A	B_1	B_2	C	D	E	F_1	F_2	S_1	S_2	ØL	M (Screws)		Weight kg
													Metric	UNC	
$^1/_2$"	VEFL 935	16	10	10	40.49	56	18.24	61.6	47.2	39	38	8.5	M 8 x 35	$^5/_{16}$" x 1$^1/_4$"	0.48
$^3/_4$"	VEFL 936	16	10	17	50.80	71	23.80	78.0	60.0	48	48	10.5	M 10 x 35	$^3/_8$" x 1$^1/_2$"	0.83
$^3/_4$"	VEFL 937	20	12	17	50.80	71	23.80	78.0	60.0	48	48	10.5	M 10 x 35	$^3/_8$" x 1$^1/_2$"	0.87
$^3/_4$"	VEFL 938	25	15	17	50.80	71	23.80	78	60	48	48	10.5	M 10 x 35	$^3/_8$" x 1$^1/_2$	0.96
1"	VEFL 939	25	15	20	57.15	81	27.76	94.0	69.6	60	60	12.0	-	$^7/_{16}$" x 1$^3/_4$"	1.35
												12.5	M 12 x 45	-	
1"	VEFL 940	30	22	25	57.15	81	27.76	94	69.6	60	60	12.0	-	$^7/_{16}$" x 1$^3/_4$"	1.40
												12.5	M 12 x 45	-	
1"	VEFL 941	30	18	20	57.15	81	27.76	94	69.6	60	60	12.0	-	$^7/_{16}$" x 1$^3/_4$"	1.53
												12.5	M 12 x 45	-	
1$^1/_4$"	VEFL 942	30	22	27	66.68	95	31.75	106.6	77.2	68	68	13.5	-	$^1/_2$" x 1$^3/_4$"	2.10
												14.5	M 14 x 50	-	
1$^1/_4$"	VEFL 943	38	28	30	66.68	95	31.75	106.6	77.2	68	68	13.5	-	$^1/_2$" x 1$^3/_4$"	2.36
												14.5	M 14 x 50	-	
1$^1/_4$"	VEFL 944	38	22	24	66.68	95	31.75	106.6	77.2	68	68	13.5	-	$^1/_2$" x 1$^3/_4$"	2.45
												14.5	M 14 x 50	-	
1$^1/_2$"	VEFL 945	38	28	32	79.38	113	36.50	123.5	95.0	76	76	16.5	M 16 x 55	$^5/_8$" x 2"	3.25
1$^1/_2$"	VEFL 946	38	22	26	79.38	113	36.50	123.5	95	76	76	16.5	M 16 x 55	$^5/_8$" x 2"	3.38

VE-LOCK®

SAE-90^{0}SWEPT ELBOW

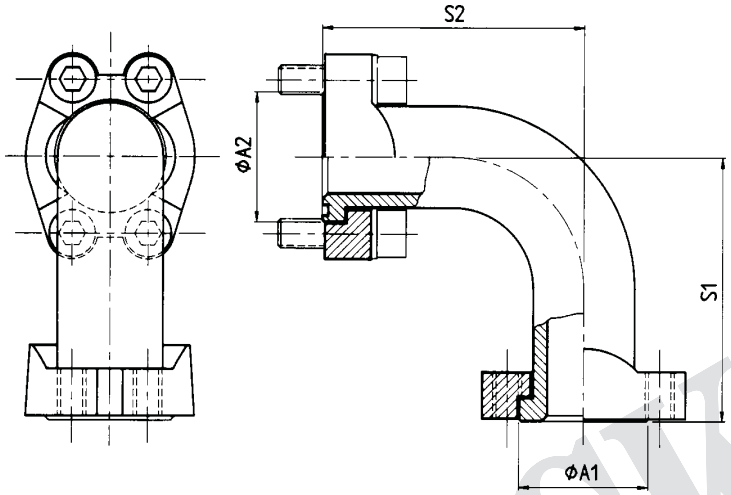

Material: ST 37

3.000 Series						
Size	VE-LOCK® ITEM CODE	A_1	A_2	S_1	S_2	Weight kg
$^1/_2$"	VEFL 947	30.2	30.2	70	70	0.65
$^3/_4$"	VEFL 948	38.1	38.1	80	80	0.90
1"	VEFL 949	44.4	44.4	90	90	1.15
$1^1/_4$"	VEFL 950	50.8	50.8	103	103	1.50
$1^1/_2$"	VEFL 951	60.3	60.3	115	115	2.55
2"	VEFL 952	71.4	71.4	135	135	2.79
$2^1/_2$"	VEFL 953	84.1	84.1	155	155	3.20
3"	VEFL 954	101.6	101.6	175	175	4.60
$3^1/_2$"	VEFL 955	114.3	114.3	175	175	5.12
4"	VEFL 956	127.0	127.0	215	215	6.25
5"	VEFL 957	152.4	152.4	250	250	7.65

VE-LOCK®

VE-LOCK

SAE - T CONNECTION

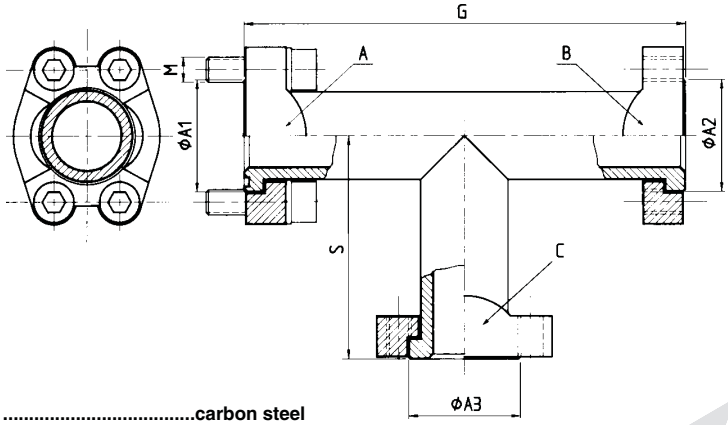

Material: ST37/ST52 .....carbon steel

VE-LOCK® ITEM CODE	Connection A			Connection B		Connection C		G	L	Weight kg
	Size	A_1	M	Size	A_2	Size	A_3			
VEFL 958	1/2"	30.2	M 8 x 30	1/2"	30.2	1/2"	30.2	133	67	0.97
VEFL 959	3/4"	38.1	M 10 x 35	3/4"	38.1	3/4"	38.1	160	80	1.20
VEFL 960	3/4"	38.1	M 10 x 35	3/4"	38.1	3/4"	38.2	160	67	1.14
VEFL 961	1"	44.4	M 10 x 35	1"	44.4	1"	44.4	177	88	1.63
VEFL 962	1"	44.4	M 10 x 35	1"	44.4	3/4"	38.1	177	80	1.50
VEFL 963	1"	44.4	M 10 x 35	1"	44.4	1/2"	30.2	177	67	1.39
VEFL 964	1 1/4"	50.8	M 10 x 30	1 1/4"	50.8	1 1/4"	50.8	208	103	2.25
VEFL 965	1 1/4"	50.8	M 10 x 30	1 1/4"	50.8	1"	44.4	208	88	2.05
VEFL 966	1 1/4"	50.8	M 10 x 30	1 1/4"	50.8	3/4"	38.1	208	80	1.94
VEFL 967	1 1/2"	60.3	M 12 x 35	1 1/2"	60.3	1 1/2"	60.3	230	114	3.50
VEFL 968	1 1/2"	60.3	M 12 x 35	1 1/2"	60.3	1 1/4"	50.8	230	103	3.03
VEFL 969	1 1/2"	60.3	M 12 x 35	1 1/2"	60.3	1"	44.4	230	88	2.94
VEFL 970	2"	71.4	M 12 x 35	2"	71.4	2"	71.4	244	122	4.20
VEFL 971	2"	71.4	M 12 x 35	2"	71.4	1 1/2"	60.3	244	118	4.05
VEFL 972	2"	71.4	M 12 x 35	2"	71.4	1 1/4"	50.8	244	115	3.87
VEFL 973	2 1/2"	84.1	M 12 x 40	2 1/2"	84.1	2 1/2"	84.1	270	135	4.70
VEFL 974	2 1/2"	84.1	M 12 x 40	2 1/2"	84.1	2"	74.1	270	128	4.30
VEFL 975	2 1/2"	84.1	M 12 x 40	2 1/2"	84.1	1 1/2"	60.3	270	125	4.10
VEFL 976	3"	101.6	M 16 x 50	3"	101.6	3"	101.6	293	146	8.20
VEFL 977	3"	101.6	M 16 x 50	3"	101.6	2 1/2"	84.1	293	141	7.50
VEFL 978	3"	101.6	M 16 x 50	3"	101.6	2"	71.4	293	133	7.20
VEFL 979	3 1/2"	114.3	M 16 x 50	3 1/2"	114.3	3 1/2"	114.3	293	146	9.55
VEFL 980	3 1/2"	114.3	M 16 x 50	3 1/2"	114.3	3"	101.6	293	146	9.20
VEFL 981	3 1/2"	114.3	M 16 x 50	3 1/2"	114.3	2 1/2"	84.1	293	146	8.50
VEFL 982	4"	127.0	M 16 x 50	4"	127.0	4"	127.0	332	165	12.10
VEFL 983	4"	127.0	M 16 x 50	4"	127.0	3 1/2"	114.3	332	158	11.60
VEFL 984	4"	127.0	M 16 x 50	4"	127.0	3"	101.6	332	158	10.95
VEFL 985	5"	152.4	M 16 x 50	5"	152.4	5"	152.4	370	185	14.70
VEFL 986	5"	152.4	M 16 x 50	5"	152.4	4"	127.0	370	177	13.95
VEFL 987	5"	152.4	M 16 x 50	5"	152.4	3 1/2"	114.3	370	170	13.10

VE-LOCK®

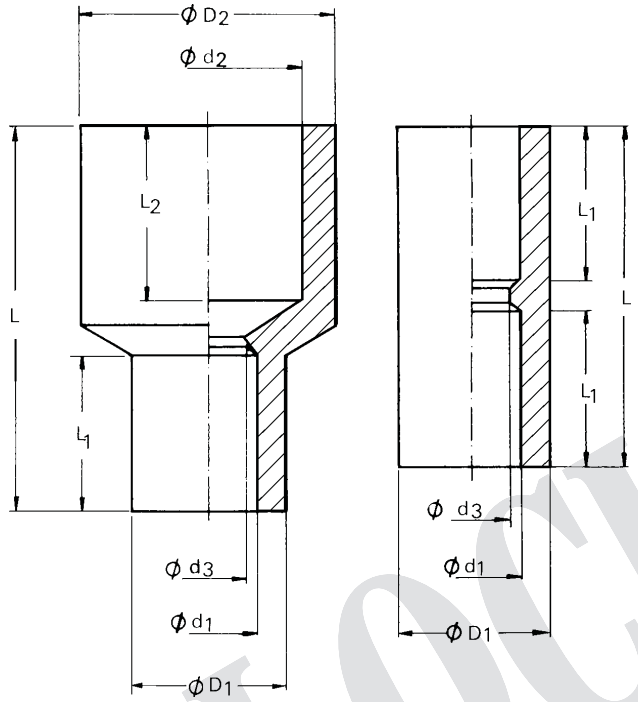

Material: 1. FE 510 (ST 52.3), FE 430 (ST 44.3).....Carbon Steel
2. 1.4404, 316L stainless.....Stainless Steel

VE-LOCK® ITEM CODE	Ød$_1$	ØD$_1$	Ød$_2$	ØD$_2$	Ød$_3$	L	L$_1$	L$_2$
VEFL 988	6.2	8.0	-	-	5.0	26	12	-
VEFL 989	10.3	16.0	-	-	8.0	35	16	-
VEFL 990	10.3	16.0	16.3	21.3	8.0	40	16	18
VEFL 991	16.3	21.3	-	-	15.0	40	18	-
VEFL 992	16.3	21.3	20.3	26.9	12.3	45	18	18
VEFL 993	20.3	26.9	-	-	18.0	40	18	-
VEFL 994	20.3	26.9	25.3	31.8	15.7	50	18	20
VEFL 995	25.3	31.8	-	-	23.0	45	20	-
VEFL 996	25.3	31.8	30.3	42.4	19.2	50	20	20
VEFL 997	30.3	42.4	-	-	27.0	45	20	-
VEFL 998	30.3	42.4	38.4	51.0	24.8	50	20	22
VEFL 999	38.4	51.0	-	-	32.0	50	22	-

VE-LOCK®

SAE - ZAKO FLANGE

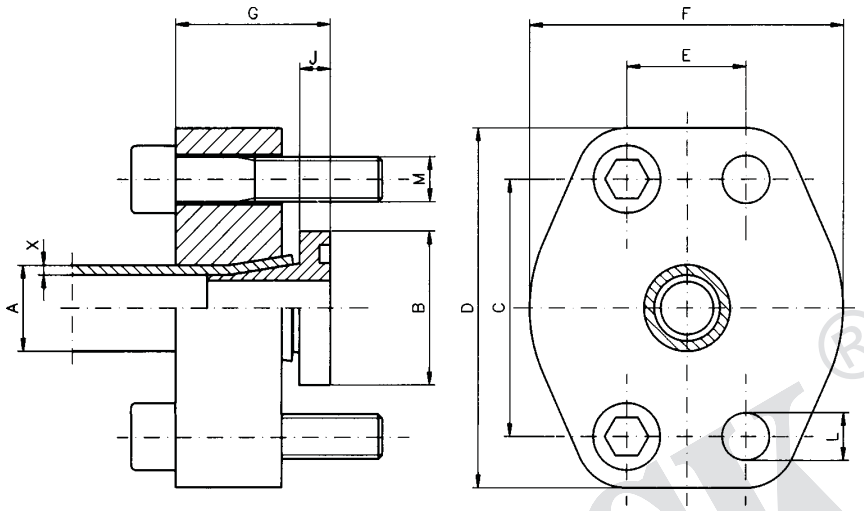

Material: **flange clamp C45, tail insert 42CrMo4V**

6.000 Series												
Size	VE-LOCK® ITEM CODE	A x X	B	C	D	E	F	G	J	ØL	M	Weight kg
3/4"	VEFL 1000	25 x 3	38.10	50.80	71	23.80	60	37.5	8.3	11	M 10 x 40	0.57
3/4"	VEFL 1001	25 x 4	38.10	50.80	71	23.80	60	37.5	8.3	11	M 10 x 40	0.57
1"	VEFL 1002	30 x 4	47.60	57.15	81	27.76	71	42.5	8.7	13	M 12 x 40	0.89
1"	VEFL 1003	30 x 5	47.60	57.15	81	27.76	71	42.5	8.7	13	M 12 x 40	0.89
1 1/4"	VEFL 1004	38 x 5	53.90	66.68	95	31.75	81	44.0	9.2	15	M 14 x 45	1.05
1 1/4"	VEFL 1005	38 x 6	53.90	66.68	95	31.75	81	44.0	9.2	15	M 14 x 45	1.05
1 1/2"	VEFL 1006	50 x 6	63.50	79.38	114	36.50	96	57.0	10.3	17	M 16 x 60	2.07
1 1/2"	VEFL 1007	50 x 8	63.50	79.38	114	36.50	96	57.0	10.3	17	M 16 x 60	2.06
2"	VEFL 1008	65 x 8	75.20	96.82	134	44.45	114	65.0	11.2	21	M 20 x 90	2.90

VE-LOCK®

SAE - ZAKO FLANGE

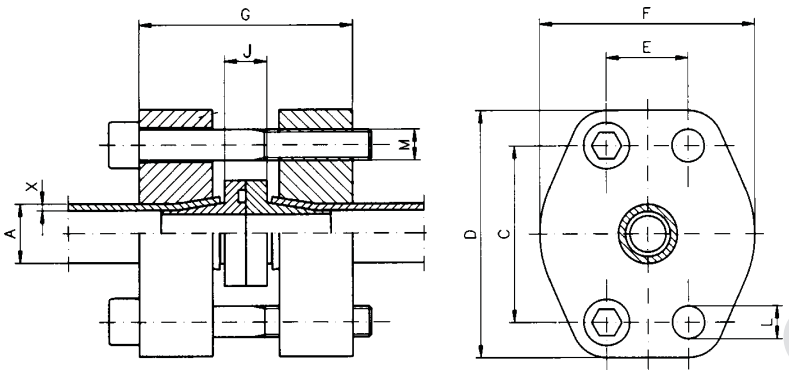

Material: **flange clamp C45, tail insert 42CrMo4V**

6.000 Series											
Size	VE-LOCK® ITEM CODE	A x X	C	D	E	F	G	J	L	M	Weights kg
3/4"	VEFL 1009	25 x 3	50.80	71	23.80	60	75	16.5	11	M 10 x 60	1.14
3/4"	VEFL 1010	25 x 4	50.80	71	23.80	60	75	16.5	11	M 10 x 60	1.14
1"	VEFL 1011	30 x 4	57.15	81	27.76	71	85	17.4	13	M 12 x 70	1.78
1"	VEFL 1012	30 x 5	57.15	81	27.76	71	85	17.4	13	M 12 x 70	1.78
1 1/4"	VEFL 1013	38 x 5	66.68	95	31.75	81	88	18.4	15	M 14 x 80	2.10
1 1/4"	VEFL 1014	38 x 6	66.68	95	31.75	81	88	18.4	15	M 14 x 80	2.10
1 1/2"	VEFL 1015	50 x 6	79.38	114	36.50	96	114	20.6	17	M 16 x 90	4.14
1 1/2"	VEFL 1016	50 x 8	79.38	114	36.50	96	114	20.6	17	M 16 x 90	4.10
2"	VEFL 1017	65 x 8	96.82	134	44.45	114	130	22.4	21	M 20 x 120	5.80

VE-LOCK®

SAE-STRAIGHT ADAPTOR FLANGE

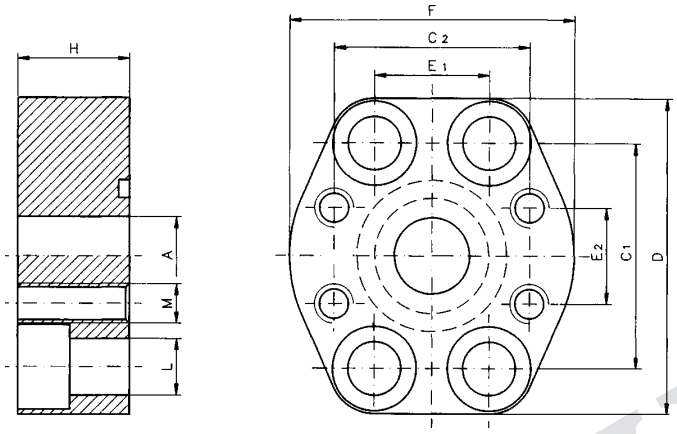

Material: ST 52.3 (Fe510).....carbon steel

6.000 Series														
Size	VE-LOCK® ITEM CODE	A_1	C_1	C_2	D	E_1	E_2	F	H	ØL	M	M (Screws)		Weight kg
												Metric	UNC	
$^3/_4$" x $^3/_4$"	VEFL 1018	19	50.80	50.80	70	23.80	23.80	70	28	11	M 10	M 10 x 35	-	0.8
1" x 1"	VEFL 1019	25	57.15	57.15	80	27.76	27.76	75	36	13	M 12	M 12 x 45	-	1.1
1" x $^3/_4$"	VEFL 1020	19	57.19	50.80	80	27.76	23.80	70	30	13	M 10	M 12 x 40	-	1.1
$1^1/_4$" x $1^1/_4$"	VEFL 1021	30	68.68	68.68	100	31.76	31.76	90	35	15	M 14	M 14 x 50	-	1.4
$1^1/_4$" x 1"	VEFL 1022	25	68.68	57.15	100	31.75	27.76	83	25	15	M 12	M 14 x 40	-	1.1
$1^1/_2$" x $1^1/_2$"	VEFL 1023	38	79.38	79.38	113	36.50	36.50	105	50	17	M 16	M 16 x 55	-	3.3
$1^1/_2$" x $1^1/_4$"	VEFL 1024	32	79.38	68.68	113	36.50	31.75	95	48	17	M 14	M 16 x 55	-	3.0
2" x $1^1/_2$"	VEFL 1025	38	96.82	79.38	140	44.45	36.50	125	60	22	M 1	M 20 x 60	-	5.3

VE-LOCK®

SAE-90°L- BLOCK

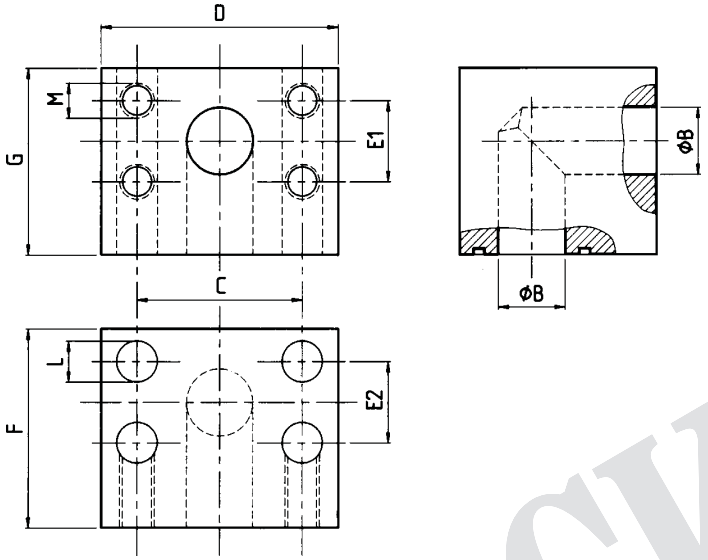

Material: ST 52.3 (FE510).....Carbon Steel
1.4404 (316L).....Stainles Steel

Size	VE-LOCK® ITEM CODE	B	C	D	E_1	E_2	F	G	ØL	M	Weight kg
3.000 Series											
1/2"	VEFL 1026	13	38.10	55	17.48	17.48	55	50	9.0	M 8	1.0
3/4"	VEFL 1027	19	47.65	65	23.25	23.25	60	60	11.0	M 10	1.2
1"	VEFL 1028	24	52.40	72	26.50	26.50	65	65	11.0	M 10	1.9
1 1/4"	VEFL 1029	32	58.72	82	30.18	30.18	82	80	11.0	M 10	3.5
1 1/2"	VEFL 1030	38	69.85	98	35.71	35.71	92	92	13.5	M 12	5.0
2"	VEFL 1031	46	77.77	102	42.88	42.88	85	87	14.0	M 12	7.9
2 1/2"	VEFL 1032	62	88.90	115	50.80	50.80	110	120	13.5	M 12	8.6
3"	VEFL 1033	73	106.38	135	61.93	61.93	150	135	17.5	M 16	10.5
6.000 Series											
1/2"	VEFL 1034	13	40.50	60	18.25	18.25	60	50	9.0	M 8	1.0
3/4"	VEFL 1035	19	50.80	72	23.80	23.80	60	55	11.0	M 10	1.4
1"	VEFL 1036	23	57.15	82	27.76	27.76	68	64	14.0	M 12	2.3
1 1/4"	VEFL 1037	30	66.68	96	31.75	31.75	76	72	16.0	M 14	3.3
1 1/2"	VEFL 1038	38	79.38	114	36.50	36.50	86	89	18.0	M 16	5.4
2"	VEFL 1039	50	96.82	133	44.45	44.45	110	105	21.0	M 20	9.0
2 1/2"	VEFL 1040	62	123.80	180	58.80	58.80	160	155	26.0	M 24	14.6

VE-LOCK®

SAE- 90°L - REDUCTION

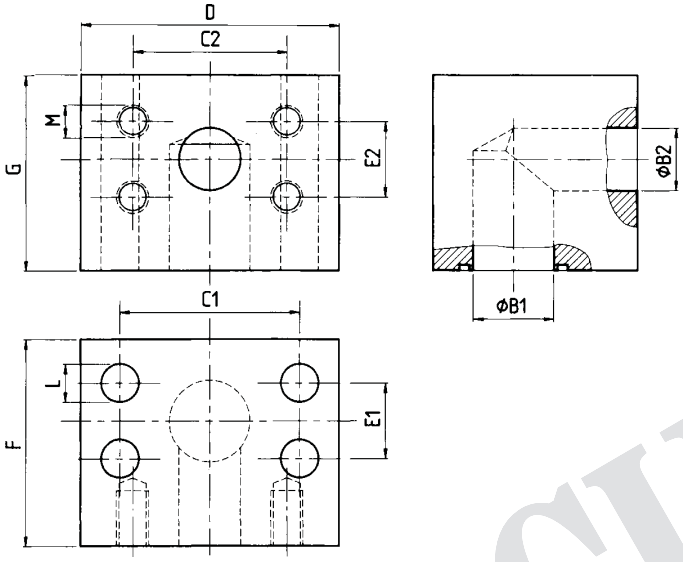

Material: ST 52.3 (FE 510)

6.000 Series													
Size	VE-LOCK® ITEM CODE	B_1	B_2	C_1	C_2	D	E_1	E_2	F	G	ØL	M	Weight kg
1"	VEFL 1041	23	19	57.15	50.80	82	27.76	23.80	68	64	14	M 10	2.8
$1^1/_4$"	VEFL 1042	30	19	66.68	50.80	96	31.75	23.80	76	72	16	M 10	3.6
$1^1/_4$"	VEFL 1043	30	23	66.68	57.15	96	31.75	27.76	76	72	16	M 12	3.3
$1^1/_2$"	VEFL 1044	38	30	79.38	66.68	114	36.50	31.75	86	89	19	M 14	5.7
2"	VEFL 1045	50	38	96.82	79.38	133	44.45	36.50	110	110	22	M 16	9.0

VE-LOCK®

SAE- 90^{0}T - BLOCK

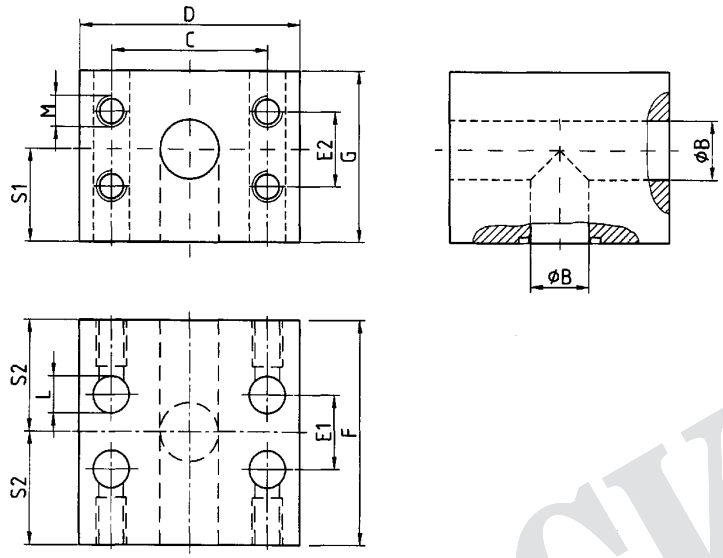

Material: ST 52.3 (FE 510)

6.000 Series													
Size	VE-LOCK® ITEM CODE	B	C	D	E_1	E_2	F	G	ØL	M	S_1	S_2	Weight kg
$^3/_4$"	VEFL 1046	19	50.80	72	23.80	23.80	72	55	11.0	M 10	32	36	1.7
1"	VEFL 1047	23	57.15	82	27.76	27.76	80	64	14.0	M 12	37	40	2.9
$1^1/_4$"	VEFL 1048	30	66.68	96	31.75	31.75	92	72	16.0	M 14	41	46	3.8
$1^1/_2$"	VEFL 1049	38	79.38	114	36.50	36.50	104	89	18.0	M 16	50	52	8.9
2"	VEFL 1050	50	96.82	133	44.45	44.45	140	105	22.0	M 20	63	70	12.7

VE-LOCK®

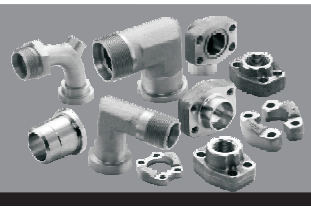

SAE - T - BLOCK - COMPANION

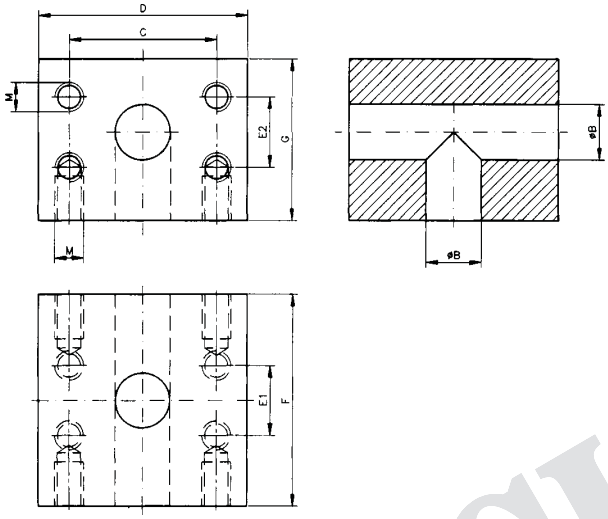

Material: ST 52.3

3.000 Series										
Size	VE-LOCK® ITEM CODE	B	C	D	E_1	E_2	F	G	M	Weight kg
1/2"	VEFL 1051	13	38.10	55	17.48	17.48	70	50	M 8	1.4
3/4"	VEFL 1052	19	47.63	65	22.23	22.23	75	55	M 10	1.8
1"	VEFL 1053	25	52.37	70	26.19	26.19	80	60	M 10	2.3
1 1/4"	VEFL 1054	32	58.72	80	30.18	30.18	90	70	M 10	3.9
1 1/2"	VEFL 1055	38	69.85	95	35.71	35.71	110	85	M 12	6.3
2"	VEFL 1056	50	77.77	100	42.88	42.88	120	110	M 12	8.3
2 1/2"	VEFL 1057	63	88.90	120	50.80	50.80	160	120	M 12	11.6
3"	VEFL 1058	73	106.38	135	61.93	61.93	160	160	M 16	15.3
6.000 Series										
1/2"	VEFL 1059	12	40.49	60	18.24	18.24	90	50	M 8	1.3
3/4"	VEFL 1060	19	50.80	72	23.80	23.80	72	55	M 10	1.7
1"	VEFL 1061	23	57.15	82	27.76	27.76	80	64	M 12	2.9
1 1/4"	VEFL 1062	30	66.68	100	31.75	31.75	92	72	M 14	3.8
1 1/2"	VEFL 1063	38	79.38	110	36.50	36.50	100	100	M 16	8.9
2"	VEFL 1064	50	96.82	133	44.45	44.45	140	105	M 20	12.7
2 1/2"	VEFL 1065	62	123.80	180	58.80	58.80	180	155	M 24	16.5

VE-LOCK®

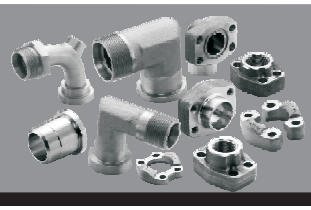

FLANGE CONNECTION DIN 3901/3902

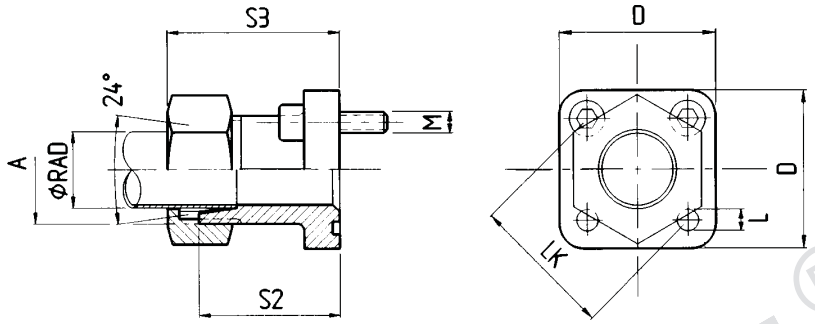

Material: A 105 surface: zinc plated, yellow chromated

LK	Maximum Working Pressure kg/cm^2	VE-LOCK® ITEM CODE	RAD	A	B	D	S2	S3	ØL	M	o-ring	Weight kg
35	315	VEFL 1066	L 10	M 16 x 1.5	11	39	30	39.0	6.4	4 x M 6 x 22	20 x 2.5	0.09
35	315	VEFL 1067	L 12	M 18 x 1.5	11	39	30	39.0	6.4	4 x M 6 x 22	20 x 2.5	0.09
35	250	VEFL 1068	L 15	M 22 x 1.5	12	39	30	38.0	6.4	4 x M 6 x 22	20 x 2.5	0.10
35	315	VEFL 1069	S 16	M 24 x 1.5	12	39	30	39.5	6.4	4 x M 6 x 22	20 x 2.5	0.11
40	100	VEFL 1070	L 15	M 22 x 1.5	13	42	35	43.0	6.4	4 x M 6 x 22	26 x 2.5	0.12
40	100	VEFL 1071	L 18	M 26 x 1.5	16	42	35	44.0	6.4	4 x M 6 x 22	26 x 2.5	0.12
40	100	VEFL 1072	L 22	M 30 x 2.0	20	42	35	44.5	6.4	4 x M 6 x 22	26 x 2.5	0.13
40	100	VEFL 1073	L 28	M 36 x 2.0	20	42	35	44.5	6.4	4 x M 6 x 22	26 x 2.5	0.16
55	250	VEFL 1074	S 20	M 30 x 2.0	14	55	35	51.0	8.4	4 x M 8 x 25	32 x 2.5	0.30

VE-LOCK®

FLANGE CONNECTION 90⁰- DIN 3901/3902

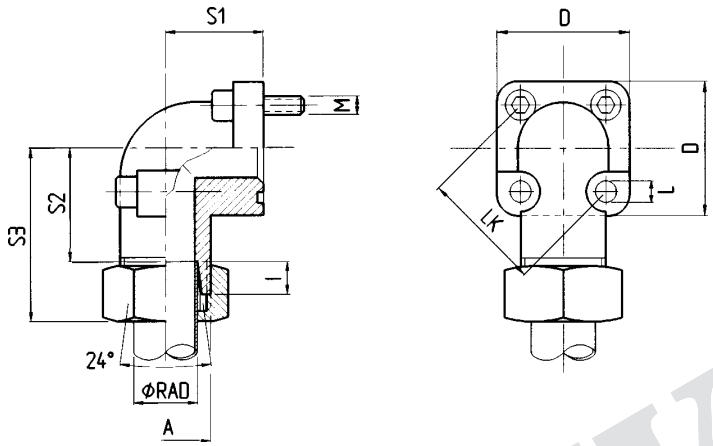

Material: GTW40 surface: zinc plated, yellow chromated

LK	Maximum Working Pressure kg/cm²	VE-LOCK® ITEM CODE	RAD	A	B	D	S_1	S_2	S_3	ØL	M	o-ring	Weight kg
35	315	VEFL 1075	L 10	M 16 x 1.5	14	39	16.5	30.5	47.0	6.4	2 x M 6 x 22 2 x M 6 x 35	20 x 2.5	0.12
35	315	VEFL 1076	L 12	M 18 x 1.5	14	39	16.5	30.5	47.0	6.4	2 x M 6 x 22 2 x M 6 x 35	20 x 2.5	0.13
35	250	VEFL 1077	L 15	M 22 x 1.5	14	39	16.5	30.0	46.0	6.4	2 x M 6 x 22 2 x M 6 x 35	20 x 2.5	0.14
35	250	VEFL 1078	L 18	M 26 x 1.5	15	39	20.0	30.0	47.5	6.4	2 x M 6 x 22 2 x M 6 x 40	20 x 2.5	0.22
35	315	VEFL 1079	S 16	M 24 x 1.5	15	39	20.0	29.5	48.0	6.4	2 x M 6 x 22 2 x M 6 x 40	20 x 2.5	0.17
35	315	VEFL 1080	S 20	M 30 x 2.0	15	39	25.0	34.5	56.0	6.4	2 x M 6 x 22 2 x M 6 x 45	20 x 2.5	0.27
40	100	VEFL 1081	L 15	M 22 x 1.5	20	42	22.5	30.0	46.0	6.4	4 x M 6 x 22	26 x 2.5	0.15
40	100	VEFL 1082	L 18	M 26 x 1.5	20	42	22.5	30.5	47.0	6.4	4 x M 6 x 22	26 x 2.5	0.17
40	100	VEFL 1083	L 22	M 30 x 2.0	20	42	22.5	30.5	47.5	6.4	4 x M 6 x 22	26 x 2.5	0.19
40	100	VEFL 1084	L 28	M 36 x 2.0	20	42	28.0	32.5	49.0	6.4	2 x M 6 x 22 2 x M 6 x 50	26 x 2.5	0.27
40	100	VEFL 1085	L 35	M 45 x 2.0	20	42	34.0	30.5	52.0	6.4	2 x M 6 x 22 2 x M 6 x 60	20 x 2.5	0.35
40	250	VEFL 1086	S 20	M 30 x 2.0	20	42	22.5	29.5	50.0	6.4	2 x M 6 x 22 2 x M 6 x 45	20 x 2.5	0.20
55	100	VEFL 1087	L 35	M 45 x 2.0	26	58	32.0	38.5	62.0	8.4	2 x M 8 x 25 2 x M 8 x 60	32 x 2.5	0.46
55	100	VEFL 1088	L 42	M 52 x 2.0	26	58	40.0	38.0	61.0	8.4	2 x M 8 x 25 2 x M 8 x 70	32 x 2.5	0.61
55	250	VEFL 1089	S 20	M 30 x 2.0	18	58	24.0	34.5	56.0	8.4	2 x M 8 x 25 2 x M 8 x 50	32 x 2.5	0.43
55	250	VEFL 1090	S 25	M 36 x 2.0	20	58	30.0	37.0	61.0	8.4	2 x M 8 x 25 2 x M 8 x 55	32 x 2.5	0.49
55	250	VEFL 1091	S 30	M 42 x 2.0	26	58	32.0	35.5	62.0	8.4	2 x M 8 x 25 2 x M 8 x 50	32 x 2.5	0.51

VE-LOCK®

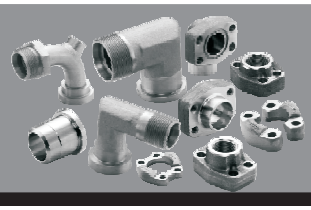

FLANGE CONNECTION 90^0
DIN 3901/3902

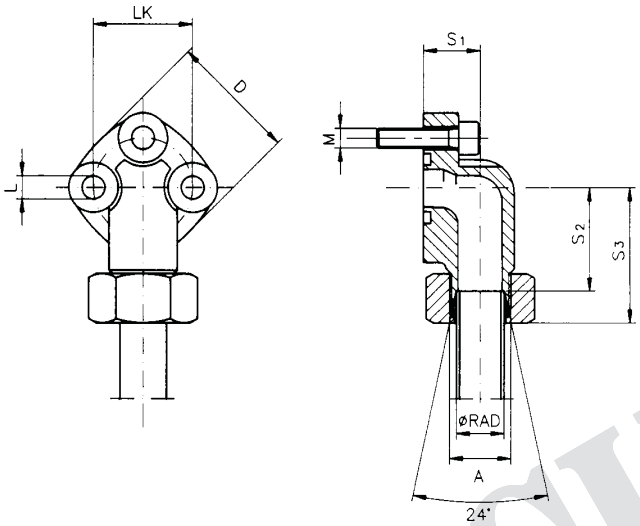

Material: **GTW40 surface: zinc plated, yellow chromated**

LK	Maximum Working Pressure kg/cm^2	VE-LOCK® ITEM CODE	RAD	A	D	S_1	S_2	S_3	ØL	M	o-ring	Weight kg
26	250	VEFL 1092	L 12	M 18 x 1.5	32	16	25.0	41.5	5.4	3 x M 5 x 20	14 x 1.78	0.13
30	250	VEFL 1093	L 15	M 18 x 1.5	38	19	30.0	46.5	6.4	3 x M 6 x 25	16 x 2.50	0.14
30	160	VEFL 1094	L 22	M 22 x 1.5	38	19	30.0	46.0	6.4	3 x M 6 x 25	16 x 2.50	0.29
40	160	VEFL 1095	L 28	M 30 x 2.0	48	25	35.5	52.5	8.4	2 x M 8 x 30	24 x 2.50	0.40

VE-LOCK®

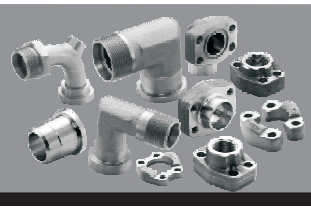

VE-LOCK

90° COMPACT ELBOW - STEEL

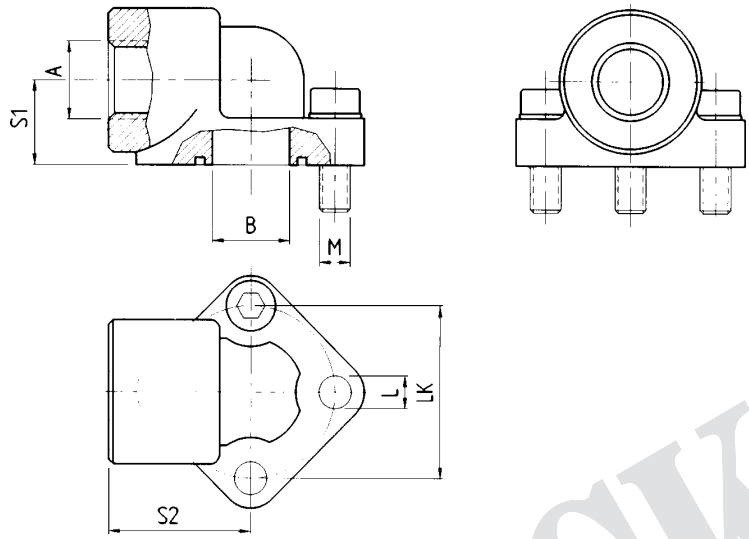

Material: **ST42.3 surface: zinc plated, yellow chromated**

LK	Maximum Working Pressure kg/cm²	VE-LOCK® ITEM CODE	A	ØB	S_1	S_2	L	M	o-ring	Weight kg
26	315	VEFL 1096	R 3/8"	11	17	24	5.3	3 x M 5 x 20	14.00 x 1.78	0.16
26	315	VEFL 1097	R 1/2"	11	17	24	5.3	3 x M 5 x 20	14.00 x 1.78	0.15
30	315	VEFL 1098	R 3/8"	12	17	24	6.3	3 x M 6 x 20	15.88 x 2.62	0.16
30	315	VEFL 1099	R 1/2"	12	17	24	6.3	3 x M 6 x 20	15.88 x 2.62	0.15
40	315	VEFL 1100	R 1/2"	19	21	36	8.5	3 x M 8 x 25	23.81 x 2.62	0.33
40	315	VEFL 1101	R 3/4"	19	21	36	8.5	3 x M 8 x 25	23.81 x 2.62	0.31
51	315	VEFL 1102	R 3/4"	26	26	45	10.5	3 x M 10 x 30	31.42 x 2.62	0.57
51	315	VEFL 1103	R 1"	26	26	45	10.5	3 x M 10 x 30	31.42 x 2.62	0.52
56	315	VEFL 1104	R 3/4"	26	26	45	10.5	3 x M 10 x 30	31.42 x 2.62	0.57
56	315	VEFL 1105	R 3/4"	26	26	45	10.5	3 x M 10 x 30	31.42 x 2.62	0.52

VE-LOCK®

VE-LOCK

90° COMPACT ELBOW - ALUMINIUM

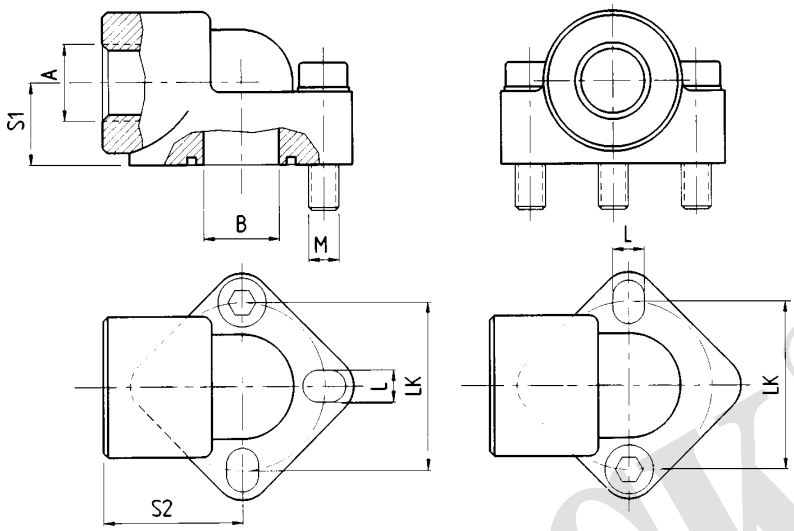

Material: **Aluminium**

LK	Maximum Working Pressure kg/cm2	VE-LOCK® ITEM CODE	A	ØB	S_1	S_2	ØL	M	o-ring	Weight kg
26.0	180	VEFL 1106	R $^3/_8$"	10.0	18.0	31	5.3	3 x M 5 x 35	14.00 x 1.78	0.06
26.0	180	VEFL 1107	R $^1/_2$"	10.0	18.0	31	5.3	3 x M 5 x 35	14.00 x 1.78	0.05
30.0	180	VEFL 1108	R $^3/_8$"	12.5	18.0	30	6.5	3 x M 6 x 35	15.88 x 2.62	0.08
30.0	180	VEFL 1109	R $^1/_2$"	12.5	18.0	30	6.5	3 x M 6 x 35	15.88 x 2.62	0.08
40.0	180	VEFL 1110	R $^1/_2$"	18.5	20.0	40	8.5	3 x M 8 x 45	22.22 x 2.62	0.15
40.0	180	VEFL 1111	R $^3/_4$"	18.5	20.0	40	8.5	3 x M 8 x 45	22.22 x 2.62	0.16
51.0	180	VEFL 1112	R $^3/_4$"	25.0	26.0	46	10.5	3 x M 10 x 60	29.75 x 3.53	0.32
56.0	180	VEFL 1113	R 1"	25.0	26.0	46	10.5	3 x M 10 x 60	29.75 x 3.53	0.33
62.0	120	VEFL 1114	R $^1/_4$"	32.0	33.5	57	13.0	2 x M 12 x 35	35.80 x 3.53	0.39
72.5	120	VEFL 1115	R $1^1/_2$"	40.0	38.0	64	13.0	2 x M 12 x 35	44.04 x 3.53	0.49

VE-LOCK®

90° COMPACT ELBOWS

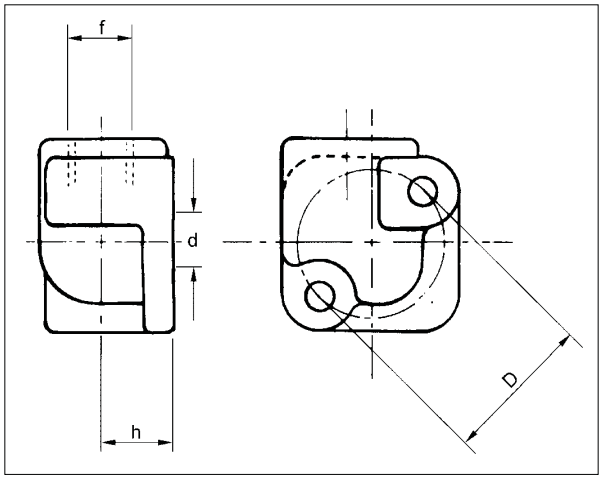

VE-LOCK® ITEM CODE	f	Ød	h	D
VEFL 1116	R3/8"	10.5	17	30
VEFL 1117	R1/2"	10.5	17	30

Elbows in aluminium supplied with screws, washers and O-rings.

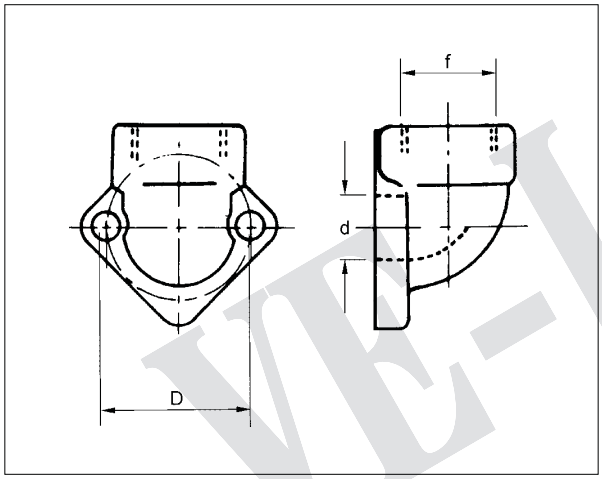

VE-LOCK® ITEM CODE	Ød	f	h	D
VEFL 1118	12.5	R3/8"	17.5	30.0
VEFL 1119	12.5	R1/2"	17.5	30.0
VEFL 1120	12.5	R3/8"	18.5	40.0
VEFL 1121	12.5	R3/8"	21.0	40.0
VEFL 1122	19.0	R3/4"	21.0	40.0
VEFL 1123	26.0	R1"	25.5	51.0
VEFL 1124	20.0	R3/4"	27.0	56.0
VEFL 1125	26.0	R1"	27.0	56.0
VEFL 1126	33.0	R1 1/4"	34.5	62.0
VEFL 1127	40.0	R1 1/2"	34.5	72.5
VEFL 1128	65.0	R2 1/2"	51.0	92.0

Elbows in C.I. supplied with screws, washers and O-rings.

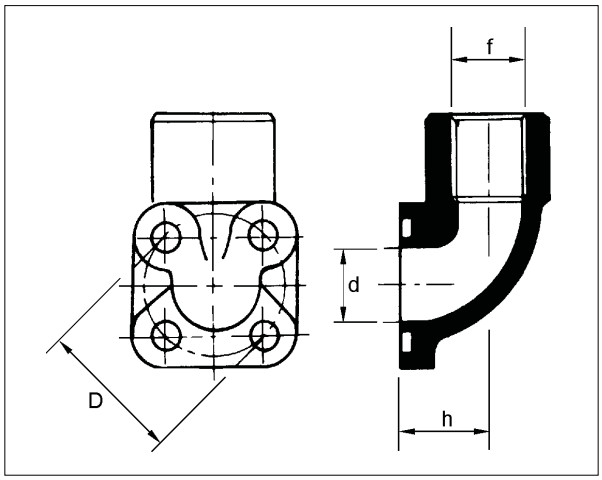

VE-LOCK® ITEM CODE	f	D	d	h
VEFL 1129	R3/8"	35	13	18
VEFL 1130	R1/2"	35	13	18
VEFL 1131	M18 x 1.5	35	13	18
VEFL 1132	M18 x 1.5	40	19	24
VEFL 1133	R1/2"	40	19	24
VEFL 1134	R3/4"	40	19	24
VEFL 1135	R1"	55	26	28
VEFL 1136	R3/4"	55	26	28

*** Manufactured in aluminium**

Elbows in C.I. supplied with screws, washers and O-rings.

VE-LOCK®

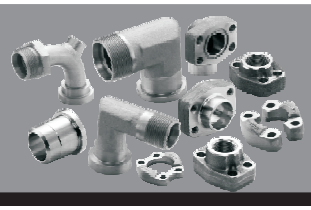

90° COMPACT ELBOW - ALUMINIUM

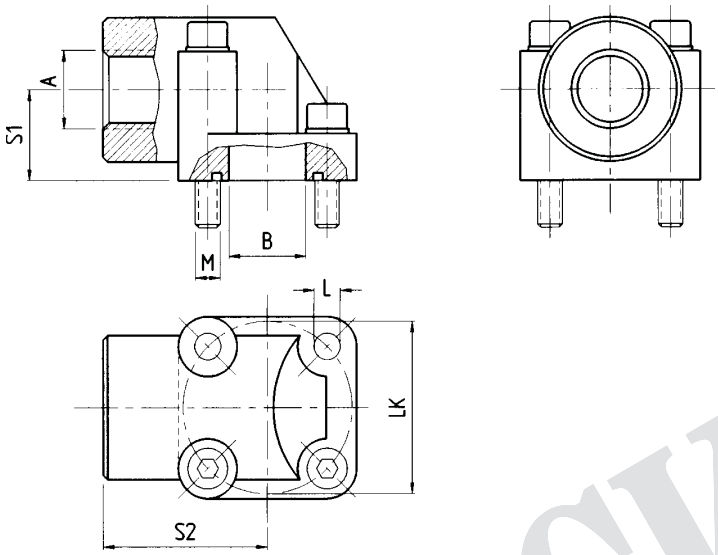

Material: **Aluminium**

LK	Maximum Working Pressure kg/cm2	VE-LOCK® ITEM CODE	A	B	S_1	S_2	L	M	o-ring	Weight kg
30	180	VEFL 1137	R 3/8"	11.5	18	40.0	6.5	2 x M 6 x 30 2 x M 6 x 45	15.88 x 2.62	0.09
30	180	VEFL 1138	R 1/2"	11.5	18	40.0	6.5	2 x M 6 x 30 2 x M 6 x 45	15.88 x 2.62	0.09
35	180	VEFL 1139	R 3/8"	14.0	18	42.5	6.5	2 x M 6 x 30 2 x M 6 x 45	18.72 x 2.62	0.11
35	180	VEFL 1140	R 1/2"	14.0	18	42.5	6.5	2 x M 6 x 30 2 x M 6 x 45	18.72 x 2.62	0.10
40	180	VEFL 1141	R 1/2"	17.0	24	47.5	6.5	2 x M 6 x 35 2 x M 6 x 55	22.22 x 2.62	0.18
40	180	VEFL 1142	R 3/4"	17.0	24	47.5	6.5	2 x M 6 x 35 2 x M 6 x 55	22.22 x 2.62	0.17
55	180	VEFL 1143	R 3/4"	25.0	29	54.0	8.5	2 x M 8 x 45 2 x M 8 x 60	29.75 x 3.53	0.31
55	120	VEFL 1144	R 1"	25.0	29	54.0	8.5	2 x M 8 x 45 2 x M 8 x 60	29.75 x 3.53	0.30

VE-LOCK®

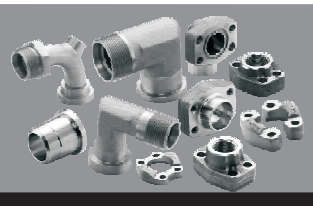

FLANGE CONNECTION - STRAIGHT

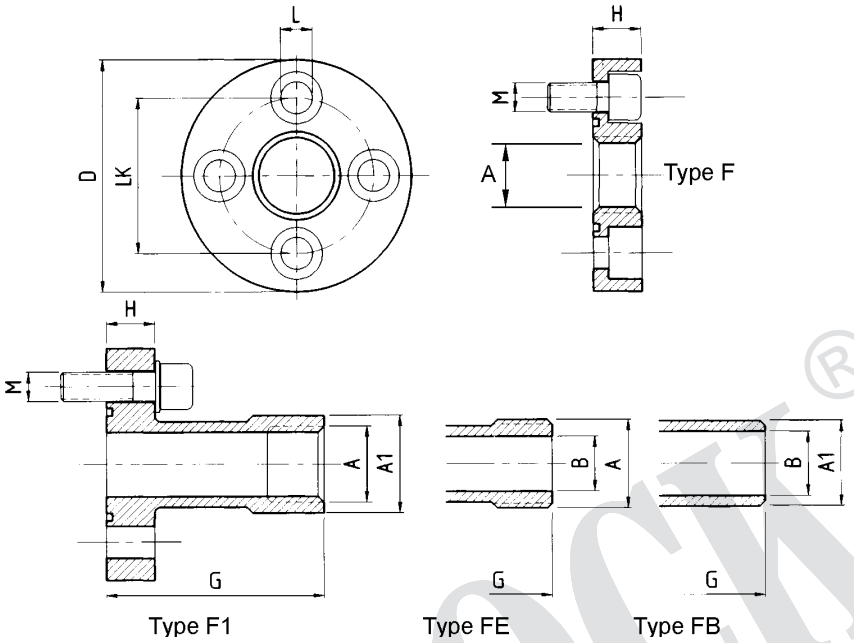

Material: ST 42.3 surface: zinc plated, yellow chromated

LK	Maximum Working Pressure kg/cm^2	VE-LOCK® ITEM CODE	A	A_1	B	ØD	G	H	ØL	M	o-ring	Weight kg
30.0	250	VEFL 1145	R $^3/_8$"	-	-	45	-	11.5	6.5	4 x M 6 x 20	18.77 x 1.78	0.10
30.0	250	VEFL 1146	R $^3/_8$"	21	-	45	55	10.0	6.5	4 x M 6 x 20	18.77 x 1.78	0.15
30.0	250	VEFL 1147	R $^1/_2$"	-	14.0	45	55	10.0	6.5	4 x M 6 x 20	18.77 x 1.78	0.15
30.0	250	VEFL 1148	-	19	14.0	45	55	10.0	6.5	4 x M 6 x 20	18.77 x 1.78	0.15
40.0	250	VEFL 1149	R $^1/_2$"	-	-	58	-	14.0	8.5	4 x M 8 x 25	18.77 x 1.78	0.21
40.0	250	VEFL 1150	R $^1/_2$"	26.5	-	58	60	12.0	8.5	4 x M 8 x 25	25.12 x 1.78	0.27
40.0	250	VEFL 1151	R $^3/_4$"	-	19.0	58	60	12.0	8.5	4 x M 8 x 25	25.12 x 1.78	0.27
40.0	250	VEFL 1152	-	25.4	19.0	58	60	12.0	8.5	4 x M 8 x 25	25.12 x 1.78	0.27
51.0	250	VEFL 1153	R $^3/_4$"	-	-	76	-	16.0	10.5	4 x M 10 x 30	25.12 x 1.78	0.48
51.0	250	VEFL 1154	R $^3/_4$"	33.5	-	76	72	16.0	10.5	4 x M 10 x 30	31.42 x 2.62	0.59
51.0	250	VEFL 1155	R 1"	-	24.0	76	72	16.0	10.5	4 x M 10 x 30	31.42 x 2.62	0.59
51.0	250	VEFL 1156	-	32.0	24.5	76	72	16.0	10.5	4 x M 10 x 30	31.42 x 2.62	0.59
56.0	250	VEFL 1157	R $^3/_4$"	-	-	76	-	16.0	10.5	4 x M 10 x 30	31.42 x 2.62	0.48
56.0	250	VEFL 1158	R $^3/_4$"	33.5	-	76	72	16.0	10.5	4 x M 10 x 30	31.42 x 2.62	0.59
56.0	250	VEFL 1159	R 1"	-	24.0	76	72	16.0	10.5	4 x M 10 x 30	31.42 x 2.62	0.69
56.0	250	VEFL 1160	-	32.0	24.5	76	72	16.0	10.5	4 x M 10 x 30	31.42 x 2.62	0.59
62.0	180	VEFL 1161	R 1"	-	-	88	-	20.0	10.5	4 x M 10 x 30	39.70 x 3.53	0.53
62.0	180	VEFL 1162	R 1"	-	-	88	-	20.0	12.5	4 x M 12 x 35	39.70 x 3.53	0.59
72.5	180	VEFL 1163	R 1$^1/_4$"	-	-	98	-	20.0	12.5	4 x M 12 x 35	42.20 x 3.53	0.64

VE-LOCK®

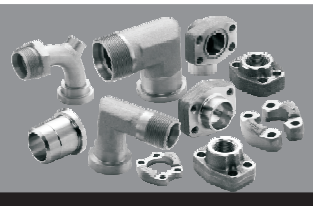

VE-LOCK

SQUARE FLANGE ND 160 BAR

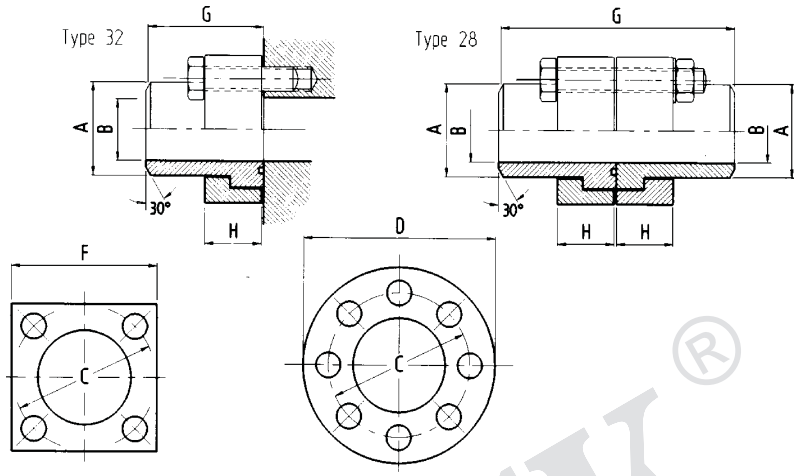

Material:
Flange: ST52.3/C45
Nipple: ST52.3/C15
Also available in 1.457

DN	VE-LOCK® ITEM CODE	ØA	ØB	C	F	D	H	G	M	o-ring	Weight kg
Single Flange											
12	VEFL 1164	16 x 2.0	12	44	50	-	19	43	4/M 10 x 35	16.3 x 2.40	0.40
16	VEFL 1165	20 x 2.5	15	54	60	-	19	50	4/M 10 x 35	25.3 x 2.40	0.65
20	VEFL 1166	25 x 3.0	19	54	60	-	19	50	4/M 10 x 35	25.3 x 2.40	0.70
25	VEFL 1167	30 x 4.0	24	64	70	-	19	56	4/M 12 x 35	29.8 x 2.60	0.90
32	VEFL 1168	38 x 5.0	28	72	80	-	24	64	4/M 12 x 40	34.5 x 2.60	1.40
40	VEFL 1169	48.3 x 5.0	38	80	90	-	29	68	4/M 16 x 50	46.0 x 3.00	2.00
50	VEFL 1170	60.3 x 6.3	48	98	100	-	38	80	4/M 16 x 60	53.3 x 5.33	3.00
65	VEFL 1171	76.1 x 7.1	62	118	120	-	47	98	4/M 20 x 70	69.2 x 5.33	5.20
80	VEFL 1172	101.6 x 10.0	82	175	180	-	58	135	4/M 30 x 90	100.0 x 6.00	16.50
100	VEFL 1173	114.3 x 11.0	92	175	180	-	58	135	4/M 30 x 90	106.6 x 6.00	16.90
125	VEFL 1174	152.4 x 16.0	120	200	-	245	69	150	8/M24 x 100	132.7 x 7.00	26.50
150	VEFL 1175	177.8 x 17.5	143	245	-	300	79	190	8/M30 x 110	148.0 x 7.00	46.50
Coupling Flange											
12	VEFL 1176	16.0 x 2.0	12	44	50	-	19	82	4/M10 x 55	16.3 x 2.40	0.75
16	VEFL 1177	20.0 x 2.5	15	54	60	-	19	96	4/M10 x 60	25.3 x 2.40	1.15
20	VEFL 1178	25.0 x 3.0	19	54	60	-	19	96	4/M10 x 60	25.3 x 2.40	1.20
25	VEFL 1179	30.0 x 4.0	24	64	70	-	19	106	4/M12 x 60	29.8 x 2.60	1.70
32	VEFL 1180	38.0 x 5.0	28	72	80	-	24	122	4/M12 x 70	34.5 x 2.60	2.65
40	VEFL 1181	48.3 x 5.0	38	80	90	-	29	130	4/M16 x 80	46.0 x 3.00	3.80
50	VEFL 1182	60.3 x 6.3	48	98	100	-	38	153	4/M16 x 100	53.3 x 5.33	5.90
65	VEFL 1183	76.1 x 7.1	62	118	120	-	47	190	4/M20 x 120	69.2 x 5.33	9.90
80	VEFL 1184	101.6 x 10.0	82	175	180	-	58	262	4/M30 x 150	100.0 x 6.00	31.65
100	VEFL 1185	114.3 x 11.0	92	175	180	-	58	262	4/M30 x 150	106.0 x 6.00	32.15
125	VEFL 1186	152.4 x 16.0	120	200	-	245	69	292	8/M24 x 170	132.7 x 7.00	53.60
150	VEFL 1187	177.8 x 17.5	143	245	-	300	79	372	8/M30 x 200	148.0 x 7.00	92.75

VE-LOCK®

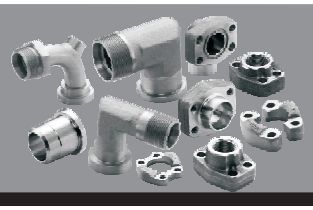

VE-LOCK

SQUARE FLANGE ND 250 BAR

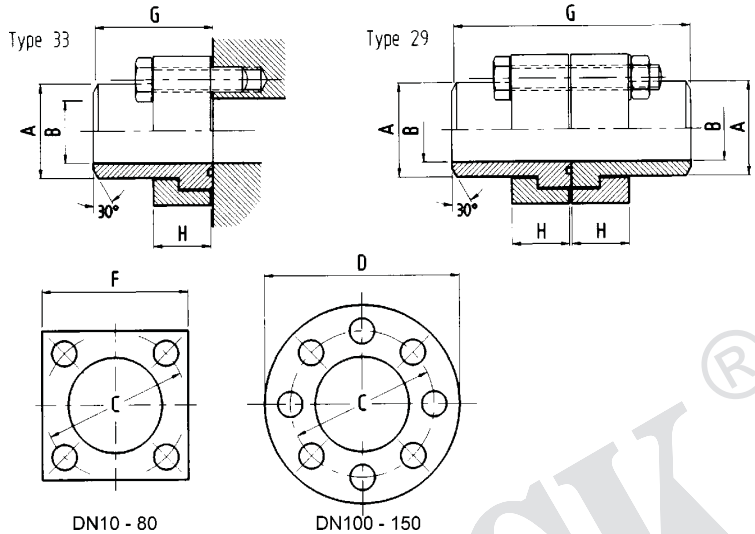

DN10 - 80

DN100 - 150

Material:
Flange: ST52.3/C45
Nipple: ST52.3/C15
Also available in 1.457

DN	VE-LOCK® ITEM CODE	ØA	ØB	C	F	D	H	G	M	o-ring	Weight kg
Single Flange											
10	VEFL 1188	17.2 x 3.6	10	44	50	-	20	43	4/M 10 x 35	16.3 x 2.40	0.44
16	VEFL 1189	21.3 x 2.6	16	54	60	-	20	50	4/M 10 x 35	25.3 x 2.40	0.71
20	VEFL 1190	26.9 x 3.6	20	64	70	-	20	56	4/M 12 x 35	29.8 x 2.60	0.90
25	VEFL 1191	33.7 x 4.5	25	72	80	-	25	64	4/M 12 x 40	34.5 x 2.60	1.40
32	VEFL 1192	42.4 x 5.6	31	80	90	-	30	68	4/M 16 x 50	43.0 x 3.00	2.10
40	VEFL 1193	60.3 x 8.0	44	98	100	-	38	80	4/M 16 x 60	53.3 x 5.33	3.10
50	VEFL 1194	76.1 x 10.0	56	118	120	-	47	98	4/M 20 x 70	61.0 x 5.00	5.40
65	VEFL 1195	88.9 x 11.0	67	145	150	-	48	109	4/M 24 x 75	75.0 x 5.00	9.00
80	VEFL 1196	101.6 x 12.5	77	175	180	-	58	135	4/M 30 x 90	88.0 x 6.00	16.90
100	VEFL 1197	139.7 x 17.5	105	200	-	245	70	150	8/M 24 x 100	115.0 x 6.00	27.85
125	VEFL 1198	168.3 x 20.0	128	245	-	300	80	190	8/M 30 x 110	148.0 x 7.00	47.70
150	VEFL 1199	193.7 x 25.0	144	290	-	355	90	190	8/M 36 x 130	183.5 x 7.00	53.20
Coupling Flange											
10	VEFL 1200	17.2 x 3.6	10	44	50	-	20	82	4/M10 x 55	16.3 x 2.40	0.80
16	VEFL 1201	21.3 x 2.6	16	54	60	-	20	96	4/M10 x 60	25.3 x 2.40	1.22
20	VEFL 1202	26.4 x 3.6	20	64	70	-	20	106	4/M12 x 60	29.8 x 2.60	1.70
25	VEFL 1203	33.7 x 4.5	25	72	80	-	25	122	4/M12 x 70	34.5 x 2.60	2.70
32	VEFL 1204	42.4 x 5.6	31	80	90	-	30	130	4/M16 x 80	43.0 x 3.00	4.00
40	VEFL 1205	60.3 x 8.0	44	98	100	-	38	153	4/M16 x 100	53.3 x 5.33	6.00
50	VEFL 1206	76.1 x 10.0	56	118	120	-	47	190	4/M20 x 120	61.0 x 5.00	10.30
65	VEFL 1207	88.9 x 11.0	67	145	150	-	48	218	4/M24 x 130	75.0 x 5.00	17.45
80	VEFL 1208	101.6 x 12.5	77	175	180	-	58	262	4/M30 x 150	88.0 x 6.00	32.60
100	VEFL 1209	139.7 x 17.5	105	200	-	245	70	292	4/M24 x 170	115.0 x 6.00	54.00
125	VEFL 1210	168.3 x 20.0	128	245	-	300	80	372	8/M30 x 200	148.0 x 7.00	90.00
150	VEFL 1211	193.7 x 25.0	144	290	-	355	90	380	8/M36 x 220	183.5 x 7.00	105.00

VE-LOCK®

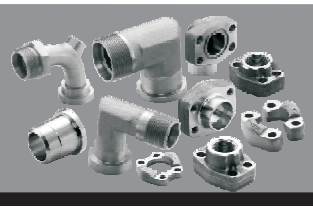

SQUARE FLANGE ND 315 BAR

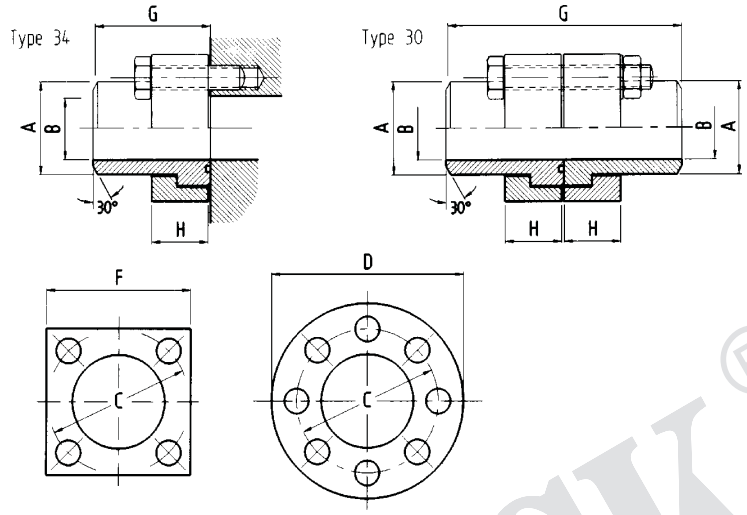

DN10 - 80

DN100 - 150

Material:
Flange: ST52.3/C45
Nipple: ST52.3/C15
Also available in 1.457

DN	VE-LOCK® ITEM CODE	ØA	ØB	C	F	D	H	G	M	o-ring	Weight kg
Single Flange											
10	VEFL 1212	17.2 x 3.6	10	44	50	-	20	43	4/M 10 x 35	16.3 x 2.40	0.45
16	VEFL 1213	26.9 x 4.5	18	54	60	-	20	50	4/M 10 x 35	25.3 x 2.40	0.70
20	VEFL 1214	33.7 x 5.6	22	64	70	-	20	56	4/M 12 x 35	29.8 x 2.60	0.90
25	VEFL 1215	42.7 x 7.1	28	72	80	-	25	64	4/M 12 x 40	34.5 x 2.60	1.45
32	VEFL 1216	48.3 x 8.0	32	80	90	-	30	68	4/M 16 x 50	43.0 x 3.00	2.20
40	VEFL 1217	60.3 x 10.0	40	98	100	-	38	80	4/M 16 x 60	53.3 x 5.33	3.20
50	VEFL 1218	76.1 x 12.5	51	118	120	-	47	98	4/M 20 x 70	61.0 x 5.00	5.60
65	VEFL 1219	88.9 x 14.2	60	145	150	-	48	109	4/M 24 x 75	75.0 x 5.00	9.50
80	VEFL 1220	114.3 x 17.5	79	175	180	-	58	135	4/M 30 x 90	88.0 x 6.00	17.60
100	VEFL 1221	152.5 x 28.0	97	200	-	245	70	150	8/M 24 x 100	115.0 x 6.00	29.30
125	VEFL 1222	177.8 x 30.0	118	245	-	300	80	190	8/M 30 x 110	148.0 x 7.00	48.20
150	VEFL 1223	219.1 x 36.0	147	290	-	355	90	190	8/M 36 x 130	183.5 x 7.00	55.10
Coupling Flange											
10	VEFL 1224	17.2 x 3.6	10	44	50	-	20	82	4/M 10 x 55	16.3 x 2.40	0.81
16	VEFL 1225	26.9 x 4.5	18	54	60	-	20	96	4/M 10 x 60	25.3 x 2.40	1.21
20	VEFL 1226	33.7 x 5.6	22	64	70	-	20	106	4/M 12 x 60	29.8 x 2.60	1.70
25	VEFL 1227	42.4 x 7.1	28	72	80	-	25	122	4/M 12 x 70	34.5 x 2.60	2.70
32	VEFL 1228	48.3 x 8.0	32	80	90	-	30	130	4/M 16 x 80	43.0 x 3.00	4.15
40	VEFL 1229	60.3 x 10.0	40	98	100	-	38	153	4/ M16 x 100	53.3 x 5.33	6.25
50	VEFL 1230	76.1 x 12.5	51	118	120	-	47	190	4/M 20 x 120	61.0 x 5.00	10.80
65	VEFL 1231	88.9 x 14.2	60	145	150	-	48	218	4/M 24 x 130	75.0 x 5.00	18.35
80	VEFL 1232	114.3 x 17.5	89	175	180	-	58	262	4/M 30 x 150	88.0 x 6.00	33.80
100	VEFL 1233	152.5 x 28.0	96	200	-	245	70	292	8/M 24 x 170	115.0 x 6.00	57.20
125	VEFL 1234	177.8 x 30.0	118	245	-	300	80	372	8/M 30 x 200	148.0 x 7.00	95.00
150	VEFL 1235	219.1 x 36.0	147	290	-	355	90	380	8/M 36 x 220	183.5 x 7.00	109.20

VE-LOCK®

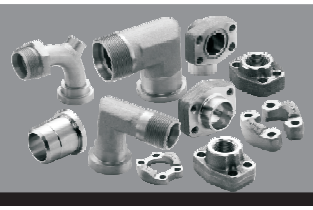

VE-LOCK

SQUARE FLANGE ND 400 BAR

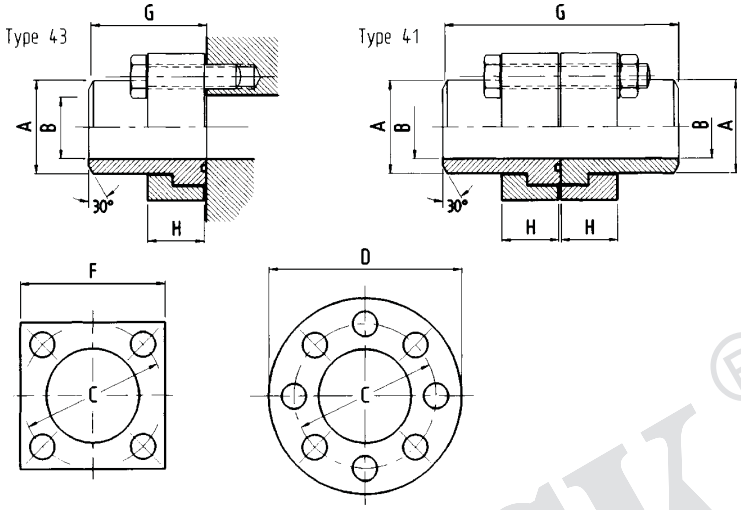

Material:
Flange: ST52.3/C45
Nipple: ST52.3/C15
Also available in 1.457

DN10 - 65

DN80 - 125

DN	VE-LOCK® ITEM CODE	A	B	C	F	D	H	G	M	o-ring	Weight kg
Single Flange											
10	VEFL 1236	17.2 x 3.6	10	44	50	-	20	43	4/M 10 x 35	16.3 x 2.40	0.45
16	VEFL 1237	26.9 x 5.6	16	54	60	-	20	50	4/M 10 x 35	25.3 x 2.40	0.70
20	VEFL 1238	33.7 x 6.3	21	64	70	-	20	56	4/M 12 x 35	29.8 x 2.60	0.90
25	VEFL 1239	42.7 x 8.0	26	72	80	-	25	64	4/M 12 x 40	34.5 x 2.60	1.45
32	VEFL 1240	60.3 x 12.5	35	98	100	-	38	80	4/M 16 x 50	53.3 x 5.33	2.20
40	VEFL 1241	70.0 x 14.2	41	118	120	-	45	100	4/M 20 x 60	61.0 x 5.00	3.20
50	VEFL 1242	88.9 x 17.5	54	145	150	-	48	109	4/M 24 x 70	75.0 x 5.00	5.60
65	VEFL 1243	101.6 x 20.0	62	175	180	-	58	135	4/M 30 x 95	88.0 x 6.00	9.50
80	VEFL 1244	139.7 x 28.0	83	200	-	245	70	150	8/M 24 x 100	115.0 x 6.00	17.60
100	VEFL 1245	168.3 x 32.0	104	245	-	300	80	190	8/M 30 x 110	148.0 x 7.00	29.30
125	VEFL 1246	219.1 x 45.0	129	290	-	355	90	190	8/M 36 x 130	183.5 x 7.00	48.20
Coupling Flange											
10	VEFL 1247	17.2 x 3.6	10	44	50	-	20	80	4/M 10 x 55	16.3 x 2.40	0.81
16	VEFL 1248	26.9 x 5.6	16	54	60	-	20	94	4/M 10 x 60	25.3 x 2.40	1.21
20	VEFL 1249	33.7 x 6.3	21	64	70	-	20	106	4/M 12 x 60	29.8 x 2.60	1.70
25	VEFL 1250	42.4 x 8.0	26	72	80	-	25	122	4/M 12 x 70	34.5 x 2.60	2.70
32	VEFL 1251	60.3 x 12.5	35	98	100	-	38	130	4/M 16 x 80	53.3 x 5.33	4.15
40	VEFL 1252	70.0 x 14.2	41	118	120	-	45	190	4/M 20 x 110	61.0 x 5.00	6.25
50	VEFL 1253	88.9 x 17.5	54	145	180	-	48	210	4/M 24 x 120	75.0 x 5.00	10.80
65	VEFL 1254	101.6 x 20.0	62	175	180	-	58	262	4/M 30 x 130	88.0 x 6.00	18.35
80	VEFL 1255	139.7 x 28.0	83	200	-	245	70	292	8/M 24 x 170	115.0 x 6.00	33.80
100	VEFL 1256	168.3 x 32.0	104	245	-	300	80	372	8/M 30 x 200	148.0 x 7.00	57.20
125	VEFL 1257	219.1 x 45.0	129	290	-	355	90	380	8/M 36 x 220	183.5 x 7.00	95.00

VE-LOCK®

90° WELD - ON FLANGE

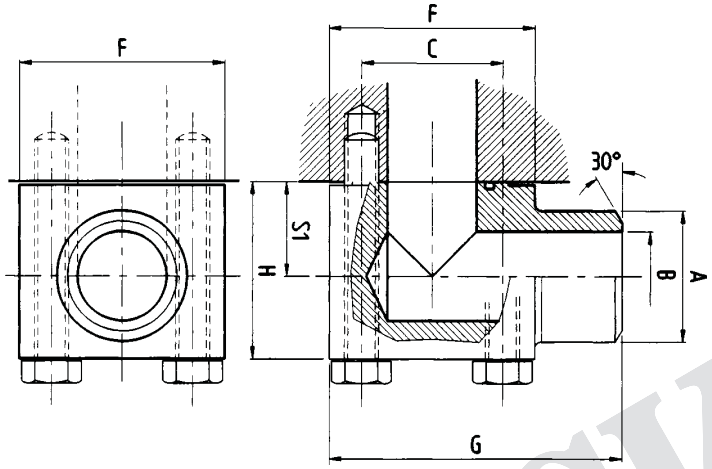

Material: ST52.3/C15

Elbow Only											
DN	Maximum Working Pressure kg/cm2	VE-LOCK® ITEM CODE	ØA	ØB	C	F	S_1	H	G	M	o-ring
10	250	VEFL 1258	17.2 x 3.6	10	44	50	17	29	80	4/M 10 x 40	16.3 x 2.40
16	250	VEFL 1259	21.3 x 2.6	16	54	60	23	41	95	4/M 10 x 45	25.3 x 2.40
20	250	VEFL 1260	26.9 x 3.6	20	64	70	26	47	110	4/M 12 x 60	29.8 x 2.60
25	250	VEFL 1261	33.7 x 4.5	25	72	80	30	56	130	4/M 12 x 65	34.5 x 2.60
32	250	VEFL 1262	42.4 x 5.6	31	80	90	35	64	140	4/M 16 x 80	43.0 x 3.00
40	250	VEFL 1263	60.3 x 8.0	44	98	100	40	76	155	4/M 16 x 90	53.3 x 5.33
50	250	VEFL 1264	76.1 x 10.0	56	118	120	53	100	175	4/M 20 x 125	61.0 x 5.00
65	250	VEFL 1265	88.9 x 11.0	67	145	150	64	120	200	4/M 24 x 150	75.0 x 5.00
80	250	VEFL 1266	101.6 x 12.5	77	175	180	73	140	220	4/M 30 x 180	88.0 x 6.00

VE-LOCK®

T - CONNECTION

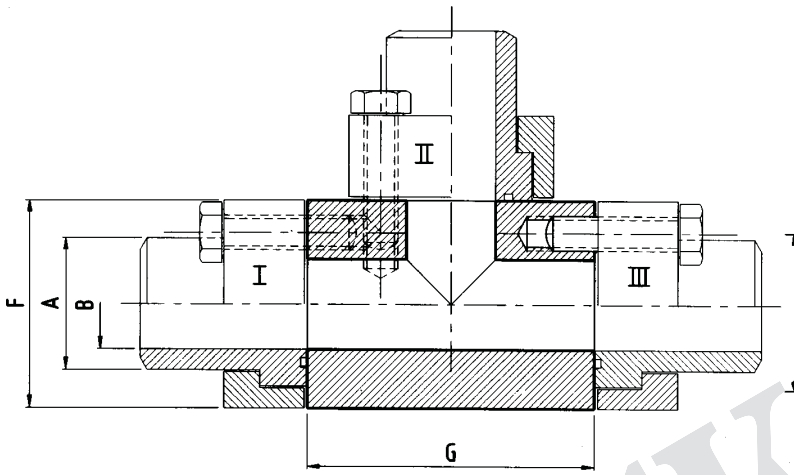

Material: ST52.3/C15

Elbow Only								
DN	VE-LOCK® ITEM CODE	A	B	C	F	G	M	o-ring
10	VEFL 1267	17.2 x 3.6	10	44	50	100	12/M 10 x 35	16.3 x 2.40
16	VEFL 1268	21.3 x 2.6	16	54	60	110	12/M 10 x 35	25.3 x 2.40
20	VEFL 1269	26.9 x 3.6	20	64	70	115	12/M 12 x 35	29.8 x 2.60
25	VEFL 1270	33.7 x 4.5	25	72	80	125	12/M 12 x 40	34.5 x 2.60
32	VEFL 1271	42.4 x 5.6	31	80	90	140	12/M 16 x 50	43.0 x 3.00
40	VEFL 1272	60.3 x 8.0	44	98	100	160	12/M 16 x 60	53.3 x 5.33
50	VEFL 1273	76.1 x 10.0	56	118	120	180	12/M 20 x 70	61.0 x 5.00
65	VEFL 1274	88.9 x 11.0	67	145	150	200	12/M 24 x 75	75.0 x 5.00
80	VEFL 1275	101.6 x 12.5	77	175	180	240	12/M 30 x 90	88.0 x 6.00

VE-LOCK®

CETOP - SQUARE FLANGE

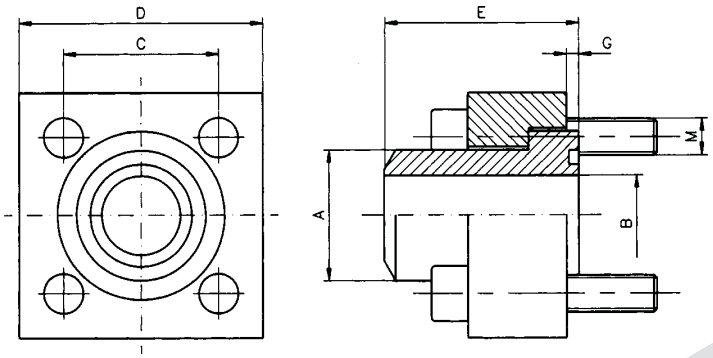

Material: ST44.3 (FE 430)
ST52.3 (FE 510)

Size	VE-LOCK® ITEM CODE	A	ØB	C	D	E	G	M	Weight kg
250 bar									
3/8"	VEFL 1276	18	12.5	24.7	40	30	1.0	M 6 x 25	0.17
1/2"	VEFL 1277	22	15	29.7	45	30	1.0	M 8 x 30	0.22
3/4"	VEFL 1278	28	20	35.3	50	35	1.0	M 8 x 30	0.32
1"	VEFL 1279	35	25	43.8	65	40	1.0	M 10 x 35	0.63
1 1/4"	VEFL 1280	43	32	51.6	75	45	1.0	M 12 x 40	0.92
1 1/2"	VEFL 1281	50	38	60	85	50	1.0	M 14 x 45	1.34
2"	VEFL 1282	62	47	69.4	100	60	1.5	M 16 x 55	2.30
2 1/2"	VEFL 1283	76	58	83.4	120	70	1.5	M 20 x 65	4.00
3"	VEFL 1284	90	70	102.5	140	80	1.5	M 20 x 75	6.03
3 1/2"	VEFL 1285	102	80	102.5	140	90	1.5	M 20 x 90	7.56
4"	VEFL 1286	114	90	113.2	160	105	1.5	M 24 x 100	10.96
400 bar									
3/8"	VEFL 1287	18	11	24.7	40	35	1.0	M 6 x 25	0.20
1/2"	VEFL 1288	22	14	29.7	45	40	1.0	M 8 x 30	0.31
3/4"	VEFL 1289	28	18	35.3	50	45	1.0	M 8 x 35	0.45
1"	VEFL 1290	35	22	43.8	65	50	1.0	M 10 x 40	0.83
1 1/4"	VEFL 1291	44	29	51.6	75	55	1.0	M 12 x 45	1.19
1 1/2"	VEFL 1292	51	35	60.0	85	60	1.0	M 14 x 55	1.80
2"	VEFL 1293	61	43	69.4	100	70	1.5	M 16 x 65	3.08
2 1/2"	VEFL 1294	80	53	83.4	120	80	1.5	M 20 x 75	5.14
3"	VEFL 1295	90	58	102.5	140	90	1.5	M 20 x 90	7.34
3 1/2"	VEFL 1296	102	63	102.5	140	95	1.5	M 20 x 90	8.09
4"	VEFL 1297	114	74	113.2	160	105	1.5	M 24 x 100	12.75

VE-LOCK®

CETOP - SQUARE FLANGE

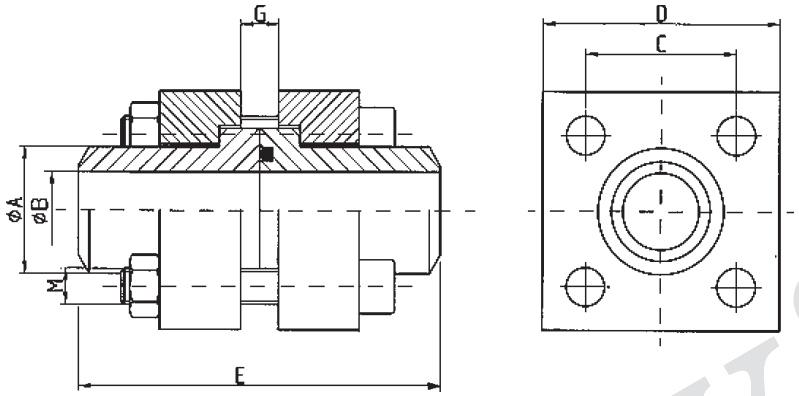

Material: ST44.3 (FE 430)
ST52.3 (FE 510)

Size	VE-LOCK® ITEM CODE	A	ØB	C	D	E	G	M	Weight kg
250 bar									
3/8"	VEFL 1298	18	12.5	24.7	40	60	2	M 6 x 45	0.42
1/2"	VEFL 1299	22	15	29.7	45	60	2	M 8 x 50	0.52
3/4"	VEFL 1300	28	20	35.3	50	70	2	M 8 x 55	0.68
1"	VEFL 1301	35	25	43.8	65	80	2	M 10 x 65	1.30
1 1/4"	VEFL 1302	43	32	51.6	75	90	2	M 12 x 75	1.98
1 1/2"	VEFL 1303	50	38	60	85	100	2	M 14 x 90	2.79
2"	VEFL 1304	62	47	69.4	100	120	3	M 16 x 100	4.67
2 1/2"	VEFL 1305	76	58	83.4	120	140	3	M 20 x 110	7.96
3"	VEFL 1306	90	70	102.5	140	160	3	M 20 x 120	11.80
3 1/2"	VEFL 1307	102	80	102.5	140	180	3	M 20 x 130	14.10
4"	VEFL 1308	114.3	90	114.5	160	210	3	M 24 x 170	21.60
400 bar									
3/8"	VEFL 1309	18	11	24.7	40	70	2	M 6 x 45	0.47
1/2"	VEFL 1310	22	14	29.7	45	80	2	M 8 x 50	0.63
3/4"	VEFL 1311	28	18	35.2	50	90	2	M 8 x 55	0.90
1"	VEFL 1312	35	22	43.8	65	100	2	M 10 x 65	1.73
1 1/4"	VEFL 1313	44	29	51.6	75	110	2	M 12 x 75	2.62
1 1/2"	VEFL 1314	51	35	60.0	85	120	2	M 14 x 90	3.76
2"	VEFL 1315	61	43	69.4	100	140	3	M 16 x 100	6.40
2 1/2"	VEFL 1316	80	53	83.4	120	160	3	M 20 x 130	10.50
3"	VEFL 1317	90	58	102.5	160	180	3	M 24 x 130	16.40
3 1/2"	VEFL 1318	102	63	113.1	160	190	3	M 24 x 150	16.70
4"	VEFL 1319	114	74	123.7	180	210	3	M 24 x 170	25.00

VE-LOCK®

CETOP 90^{0} BUTT WELD FLANGE

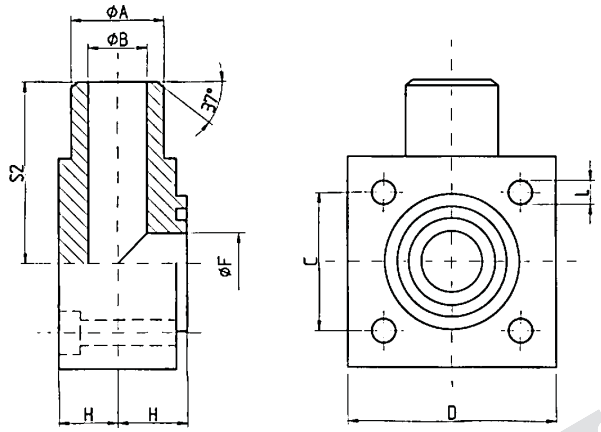

Material: ST44.3 (FE 430)
ST52.3 (FE 510)

3000 Series										
Size	VE-LOCK® ITEM CODE	A	ØB	C	D	F	H	L	S2	M
3/8"	VEFL 1320	18	12.5	24.7	40	12.5	12	6.8	32	M 6 x 30
1/2"	VEFL 1321	22	15	29.7	45	15	17	9	40	M 8 x 40
3/4"	VEFL 1322	28	20	35.3	50	20	19	9	42	M 8 x 45
1"	VEFL 1323	35	25	43.8	65	25	24	11	50	M 10 x 55
1 1/4"	VEFL 1324	43	32	51.6	75	32	30	13	56	M 12 x 70
1 1/2"	VEFL 1325	50	38	60.0	85	38	34	15	65	M 14 x 80
2"	VEFL 1326	62	47	69.4	100	47	42	17	75	M 16 x 100
2 1/2"	VEFL 1327	76	58	83.4	120	58	53	21	85	M 18 x 120
3"	VEFL 1328	90	68	102.5	140	70	59	21	100	M 20 x 140
6000 Series										
3/8"	VEFL 1329	18	11	24.7	40	12.5	12	6.8	32	M 6 x 30
1/2"	VEFL 1330	22	14	29.7	45	15	17	9	40	M 8 x 40
3/4"	VEFL 1331	28	18	35.3	50	20	19	9	42	M 8 x 45
1"	VEFL 1332	35	22	43.8	65	25	24	11	50	M 10 x 55
1 1/4"	VEFL 1333	44	29	51.6	75	32	30	13	56	M 12 x 70
1 1/2"	VEFL 1334	51	35	60.0	85	38	34	15	65	M 14 x 80
2"	VEFL 1335	61	43	69.4	100	47	42	17	75	M 16 x 100
2 1/2"	VEFL 1336	80	53	83.4	120	58	53	21	85	M 20 x 120
3"	VEFL 1337	90	58	102.5	140	58	59	21	100	M 20 x 140

VE-LOCK®

NEW REPLACEABLE SEAL SYSTEM

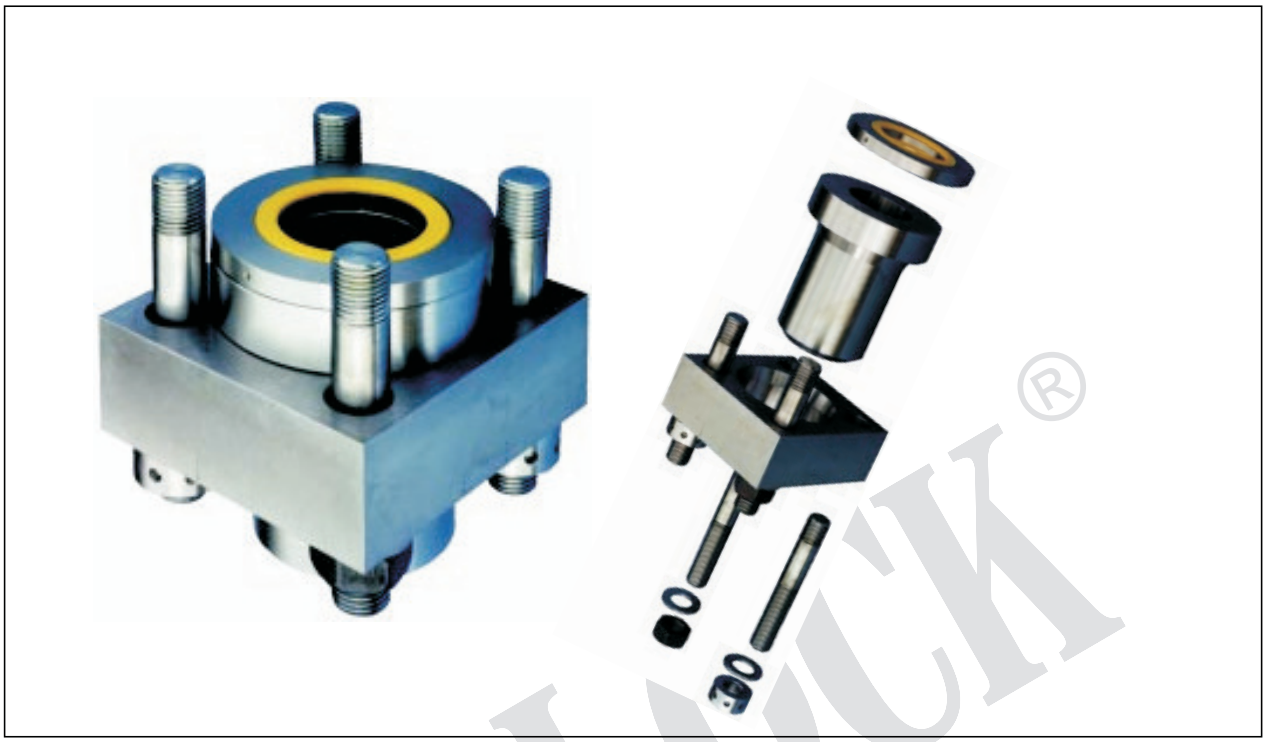

Important Characteristics

We now produce and market an innovative range of pipe flanges for fluid systems. Designed for pressures up to 450 bar, flow rat es up to 20000 l.p.m. and pipe sizes between 20 and 220 mm outside diameter. They are specifically aimed at the steel, oil, gas and f ood industries where ease of maintenance features are economically attractive. Seal replacement downtime has been found to be reduced by more than 400%.

The ease of maintenance feature involves the ability to remove the seal, which is supported within a special retaining element, and replace it without fully disconnecting or moving the mating flange or runs of pipework as it is typically the case with the sta ndard DIN and CETOP flanges found in heavy pipework systems.

There are no comparable products at the high flow end of the range. The flange design has considerable commercial potential in areas where the cost of downtime is very high, such as in offshore industry.

The flange can be supplied in any steels to suit the environment including 080M15 (standard), stainless or exotic alloys.

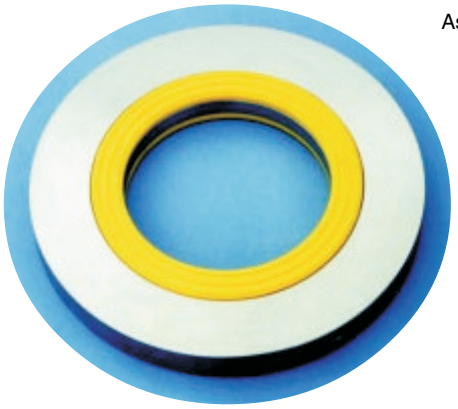

As an alternative to tightening the flanges using traditional studs and nuts they can be supplied with a bolt tensioning system that utilizes a hand operated jacking system which enable pre-tensioning of two or more studs at one time, thus alleviating the need for large torque wrenches, spanners etc. which become a big problem when space is at a premium.

- **Designed for pressures up to 450 bar**
- **Flow rates up to 20000 lpm**
- **Pipe sizes between 20 and 220 mm.**
- **Coupling flanges also available**
- **Specifically aimed at the steel, oil, gas and food industries where ease of maintenace features are particularly economically attractive.**

VE-LOCK®

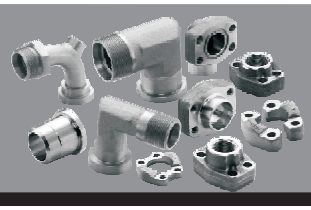

HIGH PRESSURE WELDING NIPPLE

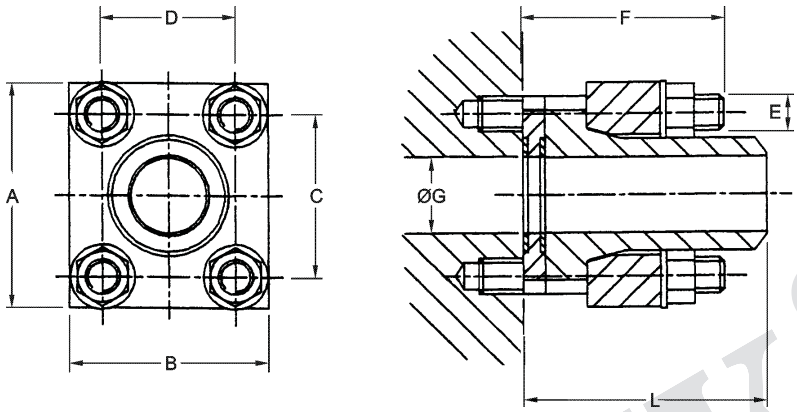

ØG Refers to maximum allowable hole in mating part

450 bar										
Part Number	VE-LOCK® ITEM CODE	A	B	C	D	E	F	G	L	W.N. BORE
QM 30 C***-	VEFL 1338	65	60	48	43	M 10	55	18	65	to suit pipe wall
QM 38 C***-	VEFL 1339	80	75	58	52	M 12	68	22	75	
QM 42 C***-	VEFL 1340	85	80	60	56	M 12	78	25	90	
QM 48 C***-	VEFL 1341	115	105	74	62	M 16	101	30	105	
QM 60 C***-	VEFL 1342	140	127	92	74	M 20	119	45	145	
QM 76 C***-	VEFL 1343	170	152	110	90	M 24	138	51	165	
QM 90 C***-	VEFL 1344	200	170	130	102	M 30	164	62	185	
QM 114 C***-	VEFL 1345	205	195	138	128	M 30	184	80	205	
QM 140 C***-	VEFL 1346	250	230	166	154	M 36F	218	98	245	
QM 168 C***-	VEFL 1347	280	265	194	178	M 42F	257	105	295	
QM 210 C***-	VEFL 1348	330	310	245	225	M 42F	292	130	320	

VE-LOCK®

HIGH PRESSURE FLANGE & WELDING NIPPLE

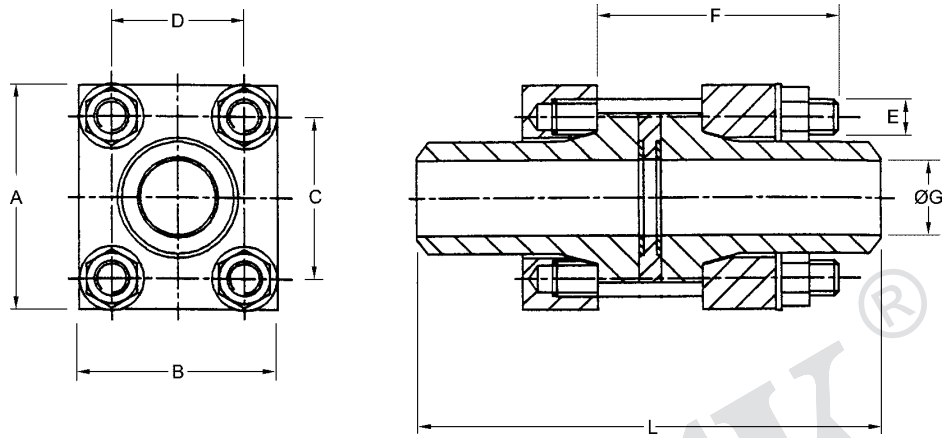

450 bar										
Part Number	VE-LOCK® ITEM CODE	A	B	C	D	E	F	G max.	L	W.N. BORE
QM 42 CC***--	VEFL 1349	85	80	60	56	M 12	92	25	165	to suit pipe wall
QM 48 CC***--	VEFL 1350	115	105	74	62	M 16	119	30	195	
QM 60 CC***--	VEFL 1351	140	127	92	74	M 20	147	45	275	
QM 76 CC***--	VEFL 1352	170	152	110	90	M 24	166	51	315	
QM 90 CC***--	VEFL 1353	200	170	130	102	M 30	201	62	355	
QM 114 CC***--	VEFL 1354	205	195	138	128	M 30	221	80	395	
QM 140 CC***--	VEFL 1355	250	230	166	154	M 36F	272	98	475	
QM 168 CC***--	VEFL 1356	280	265	194	178	M 42F	322	105	575	
QM 219 CC***--	VEFL 1357	330	310	245	225	M 42F	367	130	625	

VE-LOCK®

HIGH PRESSURE BLANKING FLANGE

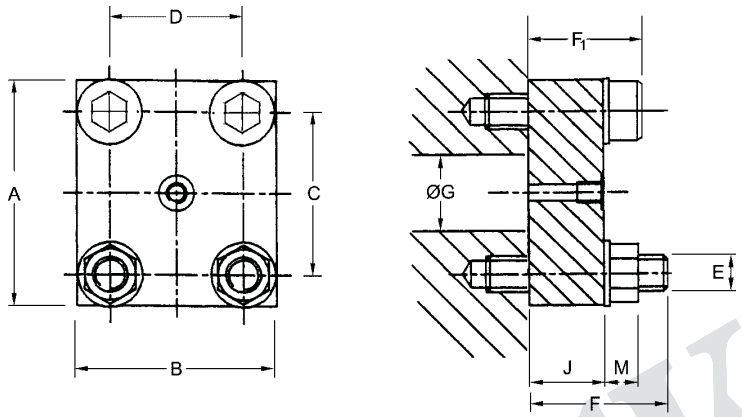

ØG Refers to maximum allowable hole in mating part

450 bar												
Part Number	VE-LOCK® ITEM CODE	A	B	C	D	E	F	F_1	G	J	M	W.N. BORE
QM 30 CB	VEFL 1358	64	60	48	43	M 10	-	35	18	25	10	to suit pipe wall
QM 38 CB	VEFL 1359	80	76	58	52	M 12	-	42	22	32	12	
QM 42 CB	VEFL 1360	85	80	60	56	M 12	-	42	25	30	12	
QM 48 CB	VEFL 1361	100	89	74	62	M 16	-	53	30	37	16	
QM 60 CB	VEFL 1362	127	105	92	74	M 20	-	57	45	37	20	
QM 76 CB	VEFL 1363	150	127	110	90	M 24	-	73	51	49	24	
QM 90 CB	VEFL 1364	200	170	130	102	M 30	109	-	62	55	28	
QM 114 CB	VEFL 1365	205	195	138	128	M 30	129	-	80	75	28	
QM 140 CB	VEFL 1366	250	230	166	154	M 36F	148	-	98	80	34	
QM 168 CB	VEFL 1367	280	265	194	178	M 42F	177	-	105	100	41	
QM 219 CB	VEFL 1368	330	310	245	225	M 42F	202	-	130	125	41	

VE-LOCK®

HIGH PRESSURE FLANGE & WELDING NIPPLE

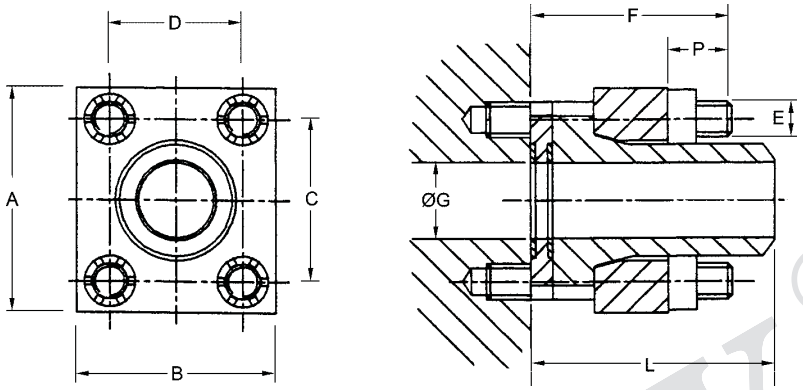

ØG Refers to maximum allowable hole in mating part

450 bar											
Part Number	VE-LOCK® ITEM CODE	A	B	C	D	E	F	G	L	P	W.N. BORE
QM 48 D***-	VEFL 1369	115	105	74	62	M 16	101	30	105	29	to suit pipe wall
QM 60 D***-	VEFL 1370	140	127	92	74	M 20	119	45	145	38	
QM 76 D***-	VEFL 1371	170	152	110	90	M 24	138	51	165	43	
QM 90 D***-	VEFL 1372	200	170	130	102	M 30	164	62	185	54	
QM 114 D***-	VEFL 1373	205	195	138	128	M 30	184	80	205	54	
QM 140 D***-	VEFL 1374	250	230	166	154	M 36F	218	98	245	65	
QM 168 D***-	VEFL 1375	280	265	194	178	M 42F	257	105	295	76	
QM 219 D***-	VEFL 1376	330	310	245	225	M 42F	292	130	320	77	

VE-LOCK®

HIGH PRESSURE FLANGE & WELDING NIPPLE

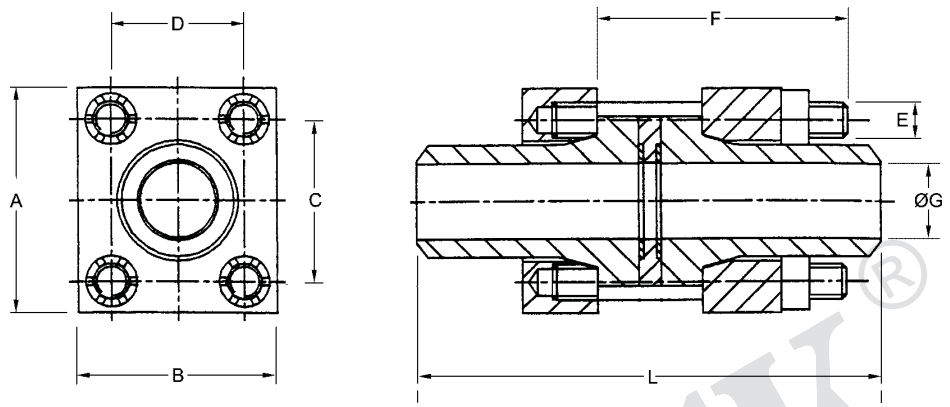

450 bar										
Part Number	VE-LOCK® ITEM CODE	A	B	C	D	E	F	G max.	L	W.N. BORE
QM 48 DC***--	VEFL 1377	115	105	74	62	M 16	119	30	195	to suit pipe wall
QM 60 DC***--	VEFL 1378	140	127	92	74	M 20	147	45	275	
QM 76 DC***--	VEFL 1379	170	152	110	90	M 24	166	51	315	
QM 90 DC***--	VEFL 1380	200	170	130	102	M 30	201	62	355	
QM 114 DC***--	VEFL 1381	205	195	138	128	M 30	221	80	395	
QM 140 DC***--	VEFL 1382	250	230	166	154	M 36F	272	98	475	
QM 168 DC***--	VEFL 1383	280	265	194	178	M 42F	322	105	575	
QM 219 DC***--	VEFL 1384	330	310	245	225	M 42F	367	130	625	

VE-LOCK®

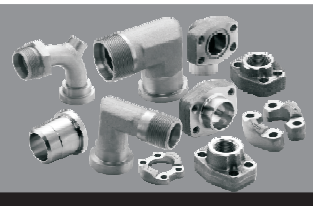

HIGH PRESSURE BLANKING FLANGE

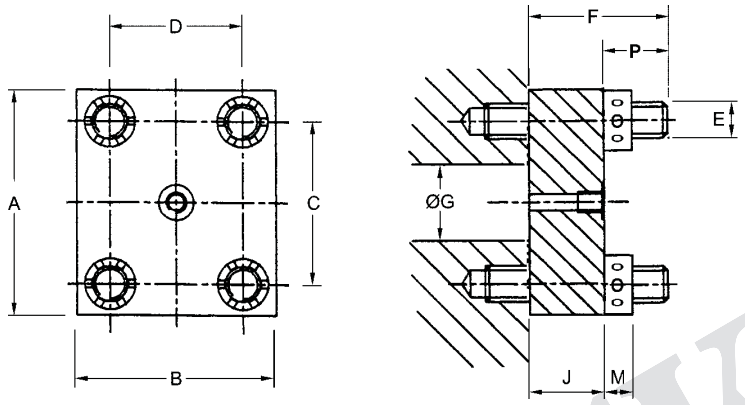

ØG Refers to maximum allowable hole in mating part

450 bar												
Part Number	VE-LOCK® ITEM CODE	A	B	C	D	E	F	G	J	M	P	W.N. BORE
QM 90 DB	VEFL 1385	200	170	130	102	M 30	109	62	55	24	54	to suit pipe wall
QM 114 DB	VEFL 1386	205	195	138	128	M 30	129	80	75	24	54	
QM 140 DB	VEFL 1387	250	230	166	154	M 36F	148	98	80	29	68	
QM 168 DB	VEFL 1388	280	265	194	178	M 42F	177	105	100	34	77	
QM 219 DB	VEFL 1389	330	310	245	225	M 42F	202	130	125	34	77	

VE-LOCK®

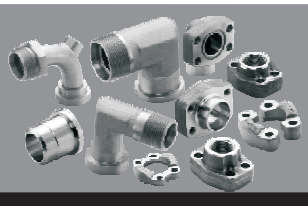

VE-LOCK

TRADE MARK CERTIFICATE

प्ररूप ओ - 2
FORM O-2

बौद्धिक सम्पदा, भारत
Intellectual Property, India

सत्यमेव जयते

भारत सरकार
GOVERNMENT OF INDIA

व्यापार चिन्ह रजिस्ट्री
TRADE MARKS REGISTRY

क्रमांक
No. 808469

व्यापार चिन्ह अधिनियम, 1999
Trade Marks Act, 1999

व्यापार चिन्ह के रजिस्ट्रीकरण का प्रमाणपत्र, धारा 23 (2) नियम 62 (I)

Certificate of Registration of Trade Mark, Section 23 (2), Rule 62 (1)

व्यापार चिन्ह संख्या / Trade Mark No. 1625767 दिनांक/ Date 29/11/2007 ज संख्या/ J.No. 1402

यह प्रमाणित किया जाता है कि जिस प्रकार चिन्ह की समाकृति इसके साथ संलग्न है, वह ..... के बारे में दिनांक ..... नाम से रजिस्ट्रीकृत हो चुका है।

Certified that the Trade Mark / a representation is annexed hereto, has been registered in the name(s) of

MEHUL PADIYA, Trading as : VAISHNAVI ENGINEERING, 127, PARAS INDUSTRIAL ESTATE, KANCHPADA, MALAD (WEST), MUMBAI - 400 064., MANUFACTURER AND MERCHANT, (Single Firm)

In Class 6 Under No. 1625767 as of the Date 29 November 2007 in respect of

PIPE CLAMPS, VALVE FITTINGS, QUICK RELEASE COUPLING FLANGES AND HYDRAULIC ITEMS.

THIS IS XEROX COPY

VE-LOCK

व्यापार चिन्ह रजिस्ट्री TRADE MARKS REGISTRY MUMBAI मुंबई

मेरे निदेश पर आज ..... के ..... मास के ..... वे दिन को इस पर मुद्रा लगायी गई।

Sealed at my direction, this 31st day of March, 2009

व्यापार चिन्ह रजिस्ट्री, Mumbai
Trade Marks Registry,

व्यापार चिन्ह रजिस्ट्रार
Registrar of Trade Marks

रजिस्ट्रीकरण आवेदन की तारीख से १० वर्ष के लिए है और तदुपरान्त वह १० वर्ष की कालावधि के लिए और प्रत्येक १० वर्ष की कालावधि के अवसान पर भी नवीनीकृत किया जा सकेगा।
Registration is for 10 years from the date of application and may then be renewed for a period of 10 years and also at the expiration of each period of 10 years.

यह प्रमाणपत्र विधि कार्यवाहियों मे प्रयोग के लिये या विदेश में रजिस्ट्रीकरण अभिप्राप्त करने के लिये नहीं है।
This certificate is not for use in Legal proceedings or for obtaining Registration abroad.

टिप्पणी - इस व्यापार चिन्ह के स्वामित्व में कोई परिवर्तन होने पर, या कारबार के मुख्य स्थान के पते में या भारत में तामील के लिये पते में परिवर्तन होने पर परिवर्तन के लिये आवेदन तुरन्त किया जाना चाहिये।
Note : Upon any change of ownership of this Trade Mark, or change in address, of the principal place of business or address for service in India a request should AT ONCE be made to register the change.

CNT. No.:

UKAS QUALITY MANAGEMENT 229

ACS REGISTRARS

Certificate Number:

50884

This is to certify that the Quality Management System of:

VAISHNAVI ENGINEERING

of

127, Paras Industrial Estate, Kanchpada, Malad (West), Mumbai, Maharashtra-400 064,India

has been assessed and registered by ACS Registrars Ltd. against the following Quality Assurance Standard:

ISO 9001:2008

The scope of registration is detailed as indicated below:

"Manufacture, Assembly and Export of Hydraulic and Engineering Products including Tube Fittings, Pipe Clamps, Hydraulic Valves, Quick Release Couplings, Flanges and Hoses"

Signed by:

Date of initial assessment:	30/06/2010
Date of registration:	08/07/2010
Date reissued:	n/a
Date of expiry:	29/06/2013*

Whilst all due care and skill was exercised in carrying out this assessment, ACS Registrars Ltd. accepts responsibility only for proven gross negligence. This is not a legal document and cannot be used as such. This certificate remains the property of ACS Registrars Ltd. to whom it must be returned upon request. Certificate validity is based on successful completion of required surveillance visits.

To check the authenticity of this certificate, please visit our website www.acsregistrars.in and enter the certificate number in the "Check Certificate Authenticity" option.

Head Office:
ACS Registrars Ltd.
International House, 178 Reddicap Heath Road, Sutton Coldfield, West Midlands
B75 7ET. UK
Tel. 0121-241-2299 Fax. 0121-241-4623
www.acsregistrars.com
www.acsregistrars.in

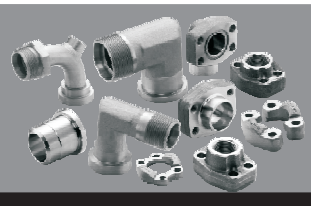

VE-LOCK

SAMPLE INSPECTION & TEST CERTIFICATES

Customer Name :-	Buyer P. O. No -
Address :-	Date
Product Specified :-	

We, At Vaishnavi Engineering is certified Ve-Lock brand make Products with its own designed QAP procedures and Ve-Lock has standardised its QAP (Quality Assurance Plan) for its all products as per below.

Ve-Lock will have to Submit the below any of the test Report as per Requirements by our Buyer along with Supply of Goods

1) Raw Materials test Report for Carbon Steel, Stainless Steel, Bras, Aluminium, PP Plastic
2) Dimensional test Report - Each product wise on Sampling Inspection basis
3) Hydro Pressure rating Test Report
4) No leakage Test Report
5) Product Analysis Report called Final Inspection Report
6) Warrantee Test Certificates for 12 Months After date of delivery of goods.
7) Catalogue Technical Data Sheet / CAD Drawings for Each Products

VE-LOCK®

FOR VAISHNAVI ENGINEERING

QC Department Stamp / Sign

AUTHORISED SIGNATORY

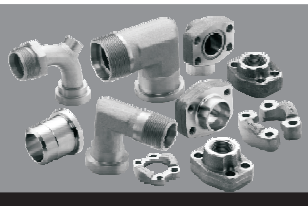

VE-LOCK

MANUFACTURE TEST REPORT
MILL TEST CERTIFICATE

VAISHNAVI ENGINEERING

MANUFACTURE TEST CERTIFICATE

QC /F0/04

Customer Name :-

BUYER PO NO :- 077/DUS//VII/11

Address : -

INSPECTED DATE :- 26/08/ 2011

Product supplied :-

MOC Specefied :- S.S. ROD Φ45mm

GRADE :- 304

CHEMICAL COMPOSITION PROOF

%	C %	Si %	Mn %	P %	S %	Cr %	Mo %	Ni %	Al
COMP	0.0430	0.5800	1.2400	0.0330	0.0090	18.4300	---	8.1500	---
REQD	--- 0.0800	--- 1.0000	--- 2.0000	--- 0.0450	--- 0.0300	18.0000 20.0000	--- ---	8.0000 11.0000	--- ---

%	Co %	Cu %	Nb %	Ti %	V %	W %	Pb %	Fe %	N %
COMP	---	---	---	---	---	---	---	---	---
REQD	--- ---	--- ---	--- ---	--- ---	--- ---	--- ---	--- ---	--- ---	--- ---

REMARK : THE ABOVE MATERIAL CONFORMS TO S.S.304 W.R.T. ELEMENTS SPECIFIED

Remark for Acceptance

We certify that above products Campare to SAE J518 Standard / in dimensions / Material testing / Product testing as above & It passed all in requirement of use.

For VAISHNAVI ENGINEERING,

QC PASSED

QC

BY:

Q C DEPARTMENT

127, Paras Industrial Estate, Kanchpada, Malad (West), Mumbai - 400 064 (India)
Tel :- +91-22-2881 9247 * Fax : +91-22-2880 3236, 2844 5942
Email : sales_velock@vehydraulics.com * Website : http//www.vehydraulics.com www.tubeclampsfittings.com

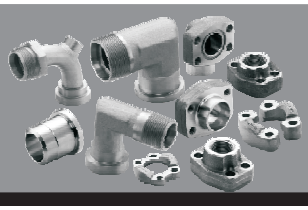

VE-LOCK

RAW MATERIAL TEST REPORT

MATERIAL INSPECTION LABORATORY

Recognised by Govt. Deptts., Classifications Societies / Third Party Inspection Agencies & Industries

103, Ardeshir Dadi Street, C. P. Tank, Mumbai - 400 004.
Tel.: (022) 6639 4914/16 • Telefax : (022) 2387 4915 • Mobile : 92234 71637
E-mail : m.inspectionlab@yahoo.com

ISO 9001:2008
Certificate No. - QAIC/IN/591-A

- Optical Emission Spectrometry
- PMI Testing
- Hardness Testing
- Ultrasonic Thickness Gauging
- Magnetic Particle Inspection
- Dye Penetrant Testing
- Ultrasonic Flaw Detection
- Dimension Checking

TEST REPORT

T/C No : A-4/ 1457

DATE 26/08/2011

PARTY NAME : VAISHNAVI ENGINEERING
127, PARAS INDUSTRIAL ESTATE,
KANCHPADA, MALAD (WEST),
MUMBAI - 400 064.

REFERENCE : --

MATERIAL DESCRIPTION: S.S.ROD 45MM DIA

GRADE : 304

%	C %	Si %	Mn %	P %	S %	Cr %	Mo %	Ni %	Al
COMP	0.0430	0.5800	1.2400	0.0330	0.0090	18.4300	--	8.1500	--
REQD	-- 0.0800	-- 1.0000	-- 2.0000	-- 0.0450	-- 0.0300	18.0000 20.0000	-- --	8.0000 11.0000	-- --

%	Co %	Cu %	Nb %	Ti %	V %	W %	Pb %	Fe %	N %
COMP	--	--	--	--	--	--	--	--	--
REQD	-- --	-- --	-- --	-- --	-- --	-- --	-- --	-- --	-- --

REMARK: THE ABOVE MATERIAL CONFORMS TO S.S.304 W.R.T. ELEMENTS SPECIFIED.

FOR MATERIAL INSPECTION LABORATORY

AUTHORISED SIGNATORY

1. The above Test report relate only to the sample submitted.
2. The above samples are not drawn by the laboratory.
3. The company or its Directors shall in no way responsible for any financial liability due to any act of omission or error made.
4. No part of this Test Report shall be reproduced without the written permission of this laboratory.

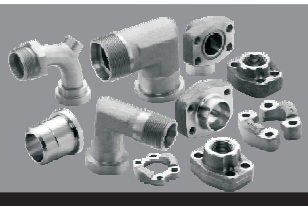

VE-LOCK

RAW MATERIAL TEST REPORT

SPECTRO METAL TEST LABORATORY

Spectro Chemical Analysis, Physical, Non Destructive & All Type of Metal Testing

CERTIFICATE OF ANALYSIS

N°: G/9115 Date: 03/06/11

Customer M/S. VAISHAVI ENGINEERING MALAD	**Order :**

This is to certify that the goods

Norm : M.S. BRIGHT BAR 41 MM	**Ref. Alloy:** ASTM A105 **Cast :** **Qt :**

have this chemical analysis:

	C%	Si%	Mn%	S%	P%	Cr%	Ni%	Mo%	Cu%
Report	0.184	0.200	0.713	0.003	0.012	0.014	0.000	0.009	0.006
Reference	---- 0.350	0.100 0.350	0.600 1.350	---- 0.040	---- 0.035	---- 0.300	---- 0.400	---- 0.120	---- 0.400

	V%	Co%	Ti%	W%	Al%	Pb%	Nb%	Fe%
Report	0.001	0.000	0.004	0.032	0.019	0.005	0.004	98.775
Reference	---- 0.080	----	----	----	----	----	----	----

Notes :

Q.C. manager :

SPECTRO METAL TEST LABORATORY Sign.

SPECTRO TEST IS ACCURACY TEST

SHOP NO. 89, 3RD KUMBHARWADA, NEAR GOL DEWOOL, MUMBAI - 400 004. Tel. : 6636 2677

NOTE : 1. The above Test reports relate only to the sample submitted. 2. The above samples are not drawn by the laboratory.
3. The company or its Directors shall in no way responsible for any financial liability due to any act of omission or error made.
4. No part of this Test Report shall be reproduced without the written permission of this laboratory.

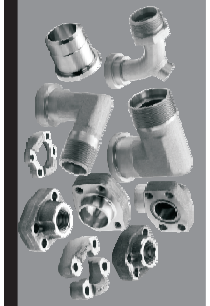

VE-LOCK

DIMENSIONAL TEST REPORT

Ve-Lock

VAISHNAVI ENGINEERING

DIAMENSION INSPECTION REPORT

OUR INSPECTION DATE - SAMPLE		Buyer Name :- SAMPLE
DESCRIPTION OF GOODS - SAE Mono Flange 2" NB 6000 PSI		Buyer P.O. NO -SAMPLE
MOC :- C.S.		PO DATE :- SAMPLE
PART NO	MONO FLANGE 2" NB 6000 PSI	REF. DRG. NO. 480
LOT SIZE	9 SET	SAMPLE SIZE :- Randomlly

CALIBRATION STATUS / ACCURACY OF ALL THE INSTRUMENT AND GAUGES VERIFIED BEFORE COMMENCEMENT OF INSPECTION AND FOUND SATISFACTORY

THE BELOW STATED DIAMENSION OF ITEMS ARE IN MILIMETERS ONLY

PART DIAMENSION	ACTUAL DIAMENSION	TOLERANCE	SAMPLE NO-1	SAMPLE NO-2	SAMPLE NO-3	SAMPLE NO-4	SAMPLE NO-5
FF	114	.+ / - 0.2	113.66	113.69	113.75	113.78	113.69
O	133.0	.+ / - 0.2	131.62	132.03	132.01	132.10	132.07
GG	44.5	.+ / - 0.2	44.54	44.57	44.52	44.49	44.52
Q	96.82	.+ / - 0.2	96.84	96.86	96.81	96.83	96.82
U	37.0	.+ / - 0.2	37.02	37.07	37.05	37.09	37.06
F	12.07	.+ / - 0.2	12.07	12.07	12.08	12.09	12.09
D	80.16	.+ / - 0.2	80.14	80.11	80.15	80.16	80.15
J	67.56	.+ / - 0.2	67.59	67.59	67.58	67.55	67.54
T	21.0	.+ / - 0.2	20.96	20.92	20.97	21.02	21.01

AQL - IS TOLERANCE LIMIT WITH IN +/- 0.1 TO 0.25 FOR ABOVE PART DIAMENSION

ALL THE ABOVE DIAMENSIONS ARE FOUND WITH IN LIMITS / NOT FOUND WITH IN LIMITS

CONCLUSION :- ALL SAMPLES ARE FOUND IN CONFORMANCE WITH THE SPECIFIED REQUIREMENTS FOR THE PARAMETER CHECK , HENCE THE LOT IS FOUND ACCEPTABLE

PREPARED BY - ASHRAF AHusain

CHECKED BY :- ANKITA

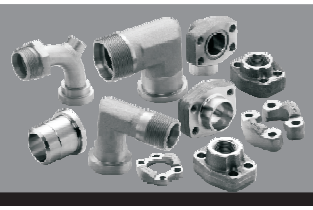

VE-LOCK

FINAL INSPECTION REPORT

ISO 9001 : 2008 Certified Company

FINAL INSPECTION REPORT - SAE FLANGES						Form - VE/QC/03
REF. VE-LOCK CATALOGUE - PAGE NO -				Date of Inspection :-		
PRODUCT NAME / P. O. NO.				Drawing Ref :-		
				Standard Ref :- SAE J 518 C		
CUSTOMER				Inspected Quantity :-		
				ATTN :-		
ADDRESS -						
SR NO	STAGES OF INSPECTION	INSPECTION CRITERIA		ORDER QTY.	Packed QTY.	Status Ok/Not Ok
		To Check Qty. Packed as per P. O./ Delivery Challen				
		No dent marks on outer surface				
		No dust / dirt particle should be there				
		Surface plating should be as per Std. Norms				
2	VISUAL INSPECTION	Size & Logo Should be Marked on both parts				
		SAE CODE 61 OR 62 - Should be written on Body				
		CHECKING WITH COUNTER FLANGE				
		CHECKING WITH WELD NIPPLES				
		CHECKING WITH ALLEN BOLTS				
3	ASSEMBLY TEST	CHECKING WITH O RING FITTMENT				
		CRITERIA	SAMPLE-1	SAMPLE-2	SAMPLE-3	SAMPLE-4	SAMPLE-5
		BOLT HOLE ID					
		DIAMENSION- A					
4	DIMENSIONAL REPORT	DIAMENSION- B					
		DIAMENSION- C					
QUANTITY ACCEPTED				QUANTITY REJECTED -		
REASON REJECTION						
QUALITY & QUANTITY ACCEPTED UNDER DEVIATION :-						
INSPECTED BY : WORKS INCHARGE				APPROVED BY : QC PASSED AUTHORITY		
NOTE : DUE TO HUGE VARIETIES IN FITTINGS PRODUCTS, WE TRACK THE ITEMS AS PER OUR GRN ONLY.						

VE-LOCK®

UTTAM

JINDAL STEEL & POWER

bilt

FLSmidth

BIJUR DELIMON INTERNATIONAL

CRYOGAS EQUIPMENT PRIVATE LIMITED

DANIELI

ESSAR

ReGen POWERTECH

JSW Steel

Hirect HIND RECTIFIERS LIMITED

PIPAVAV SHIPYARD

JSL JINDAL STAINLESS 100 YEARS OF STAINLESS STEEL

BS بشاي للصلب BESHAY STEEL

SANTEC GROUP

TATA STEEL GROWTH SHOP

SOPAN Success lies in Service

سابك sabic

RAINBOW RAINBOW PAPERS LIMITED

L&T Shipbuilding

HYDAC HYDAC (India) Pvt. Ltd.

Subsidiary of Hydac International, Germany

OAKWELL SHIPYARD

VAISHNAVI HYDRAULICS PVT. LTD.

Unit 8/A, 8/B, CIEM Industrial Area, Ramchandra Lane ent., Kanchpada,
Malad (W), Mumbai-400064 Maharashtra (India)
Tel. No. : +(91)-22-28819247/28813867 • Fax : +(91)-(22)-28813867
E-mail : sales_velock@vehydraulics.com, Website : www.tubeclampsfittings.com